International Journal of Recent Technology and Engineering (IJRTE)
ISSN: 2277-3878 (Online), Volume-7 Issue-4s, November 2018

Efficient Hand-dorsa Vein Pattern Recognition using KNN classification with Completed histogram CB in TP Feature Descriptor

C. Premavathi, P. Thangaraj

Abstract: ***Hand-dorsa Vein Recognition System identifies an individual using the human hand vein features. Image capturing, extracting the features, keeping the features in a descriptor and making classification are important methods in hand-dorsa vein Recognition. In this paper, the feature descriptor and classification method is proposed for an efficient recognition system. A completed CB in TP has been proposed to represent selected features from Hand vein image system. K-nearest classification method with various proximity measure calculations is analysed to make an efficient classification system. A new minimum distance classification is proposed with dataset and the results are checked for accuracy and reliability. The proposed technique is calculated on a NCUT Dataset contains 2040 imagesfrom Prof. Yiding Wang, North China University of technology (NCUT) (Wang et al, 2010). Proximityprocess as Chi-square, City block, Euclidean, Chebychevalong with Murkowski are calculated and compared used for the better performance. The new resultsproveto facilitate the future feature descriptor achieved excellent performance for classification system.***

Keyword: ***Feature Descriptor, K-Nearest Image Classification.***

I. INTRODUCTION

The classificationof image system analyses the features of images and categorize the unseen images in to the labelled classes. A predefined database contains the known images that compares with the new objects to classify in to different category. Image processing and classification is an vital and tedious process in different application domain including biometric authentication system, visualization of all organization activities, navigation of objects, navigationon robots and remote sensing. The Classification with images consists of different consecutive phases such as image acquisition, pre-processing, feature extraction, sampling of training data, decision on classification, analysis and pattern evaluation. In our proposed approach, the initial phase of image acquisition consists of retrieving images of hand vein system and it is filtered in pre-processing phase. Figure 1 describes the different vital phases of image processingPre-processing-→feature extraction→selection for training data→Classification -→ Evaluation of classification performance. The vital role of pre-processing is to remove noisy and irrelevant data items from the complete images, transformation of images into general schema.

Manuscript published on 30 November 2018.
***Correspondence Author(s)**
C. Premavathi, Department of Computer Science, Navarasam Arts and Science College for Women, Arachalur (Tamil Nadu), India.
P. Thangaraj, Department Computer Science and Engineering, Bannari Amman Institute of Technology, Sathyamangalam (Tamil Nadu), India.

Feature extraction is the process of analysing useful data and finds the derived values from them.

This process is also involves to find the redundant attributes and converted into reduced set of features so that all attributes are non redundant and used for subsequent learning. It would be used for better human interpretation.

The extracted features are stored like a feature vector for further analysis. A feature *descriptor* is an algorithm which obtains an image and also output as *feature descriptors/feature vectors*. Feature descriptors encrypt valued information addicted to a series of another representation that can be used to differentiate one feature from another.

Selection of training data involves in extracting features from the data and stored in descriptors. This feature is then used to identify the object in testing. The reliable recognition system identifies the test images even in the image scales, noise and illumination.

Classification process finds the category of tested samples from the known training set of data. Various classification algorithms such as SVM, Neural network and KNN classification are suggested for image classification.

Analysing and evaluation of result of classification is an important process. There are several criteria available to find the accuracy of classification algorithm. It includes accuracy, stability, robustness etc.

Hand vein images are captured and filtered for noise reduction. The information contains the vein patterns are most vital part for our computation. The specific regions of interest are needed to be extracted from the whole images. In this work, the centre of mass is considered while the hub to take out the ROI. The centroid (x0, y0) of vein image f(x, y) can be estimated as shown in (1.1, 1.2). By this effort, to extract the ROI the image kernel was recognized. Let (x_0, y_0) be the centroid of vein image f(x, y) followed by

$$x_0 = \frac{\sum_{i,j} i \times f(i, j)}{\sum_{i,j} f(i, j)} \quad (1.1)$$

$$y_0 = \frac{\sum_{i,j} j \times f(i, j)}{\sum_{i,j} f(i, j)} \quad (1.2)$$

Identifying the salient features of images is the procedure of feature extraction as well as it is stored in a feature descriptor.

Published By:
Blue Eyes Intelligence Engineering and Sciences Publication (BEIESP)

There are two types of featuresof image such as global and local is extracted from representation of image content. Global features (e.g., colour and texture) consider the whole image. Thus, it can be understand as anexact property of the image.By concerning,the entire pixels as local features plan to detect key points or an image have interest regions andillustrate them. Feature descriptors take out from the image and it can be found on second-order statistics, parametric models, coefficients attainedfrom transform of image, or constant of a mixture of these measures.

Numerousdetectors of image are available for both local and global representation. Unlike, different techniques encompass asplanned to deal with the trouble of identifying and extracting invariant featuresof image beneath these conditions.

In the literature, there are several feature extraction technique have been reviewed to work outdependable descriptors. Using, the scale invariant feature transform (SIFT) descriptor local extreme in a sequence of difference of Gaussian (DOG) functions for takeout useful features. Gradient location-orientation histogram (GLOH) is also an expansion of the SIFT descriptor. GLOH is especially similar to the SIFT descriptor, everywhere it simply replaces only the Cartesian location grid used by the SIFT with a log-polar one, and concern to decrease the size of the descriptor by to apply PCA.

In this project, the Local Binary Pattern operator had been used. It is a texture descriptor utilizes to extort the local information from input image. It is found on the gray level association of a neighbourhood of pixels. Hence, it has the probable to remove discriminative features from the hand vein images. The operator size should be modified to the information size to be extracted. Local Binary Pattern (LBP) operator was projectedby[1-3]. for rotation invariant texture classification.

Enthused by Weber's Law, a dense descriptor calculated for each pixel depending on togetherwith the local intensity variation along with the magnitude of the center pixel's intensity called Weber Local Descriptor (WLD)[5]. The advantages of SIFT in computing the histogram by means of the gradient and then its orientation, occupied byWLD descriptor and in computational efficiency and maintains smaller by LBP.

II. LOCAL BINARY PATTERNS

In dorsal vein image system, to extract the features it involves near-infra-red (NIR) illumination. A key inconcerning the dorsal hand vein feature extraction from NIR images is finding resourceful and appropriate descriptors for its appearance. Acorresponding measure for local image contrasthas first introduced by the LBP operator. The operator works on continuous eight-neighbour pixel and using the value of the center pixel like a threshold is called binary pattern operator. By multiplying weight of pixel by means of threshold values a binary code is formed and its result as exposed in figure 1.

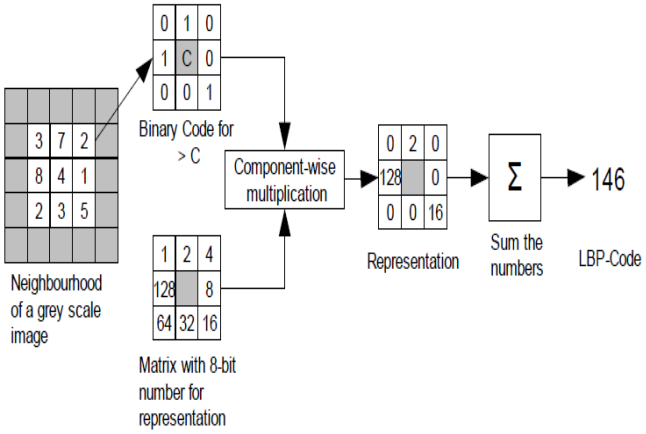

Figure 1. Example of LBP Binary Code Generators

By corresponding to an 8-bit number as like an unsigned 8-bit integer, and making it compact description by the eight neighbours of the centre. Frequently LBP code distribution in excess of an image is used to express the vein image as a histogram of that image.

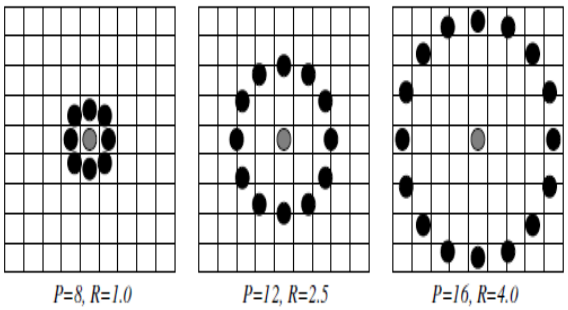

Figure 2. Circular Neighbourhoods with different radius

Each one resulting decimal number is measured as a value to be put in the corresponding bin of histogram.

In exacting, the uniform LBP puts an importance on patterns. Figure 2 shows amodel of LBP operator with 8-, 16-, and 24- neighbourhood pixels. In this project, the 3×3 neighbour pixels have been considered. This because only when the size of the mask is small, even the minute discriminate features from the hand vein images can be discovered without any loss or addition of information.

The line structures with changing width, whose gray-level values differ from the background by Dorsal hand veins. I t is found on gray-level differences in local neighbourhoods in the LBP operator. So, theprospective to extract from the hand vein images as discriminative features. It should be adapted to the size of the information to be extracted by the size of the operator. In the case of a neighbourhood surrounding a vein region, the vein will moreover cross the local neighbourhood or end side. Thus, it will not present many discriminative bitwise transitions representinggray-level changes the resulting patterns of interest. Therefore,it is logical to regard as uniform patterns[6].

A local binary patternis said to be uniform, if it contains at most two bitwise transitions from 0 to 1, or vice versa. For example, 00010000, 10000000, 00000001, 10000001 are identical patterns.

Published By:
Blue Eyes Intelligence Engineering
and Sciences Publication (BEIESP)

The operator $LBP_{P,R}^{riu2}$ is characterized to specify LBP uniform patterns.

III. LOCAL TERNARY PATTERN (LTP)

The demerits of binary coded is sensitive to noise, a small gray change of the central pixel has produces different coded. The remedial coded technique is invented by Trigs, which produces three-value codes called local ternary pattern. In this, the indicator s(x) is added denoted by:

$$LTP_{P,R,r} = \sum_{i=0}^{p-1} s(p_i\text{-}p_c) \text{ x } 3^{i.} \text{ , s(x)} = \begin{cases} 1, x \geq T \\ 0, |x| < T \\ -1, x \leq T \end{cases}$$

A feature dimension reduction is performed by including positive and negative part of ternary coded value as illustrated in figure 3.

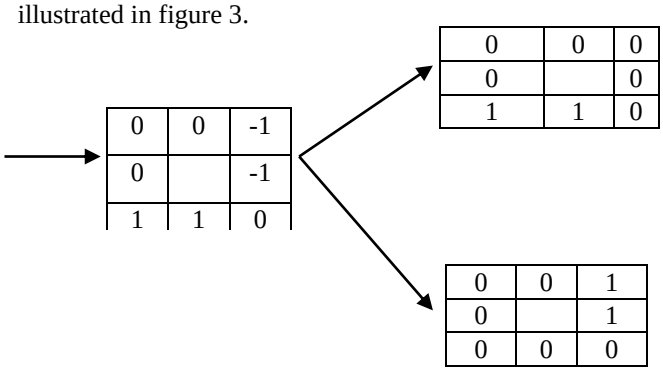

Figure 3 LTP Computation

The LTP computation in figure 4, positive part is 00110000 and negative part is 10000001. The LBP is extended to 3-valued codes. Dimensionality reduction is taken by splitting the ternary coded value by its parts of positive and negative and it have treated like individual codes. This technique, one of the three values has contained by every threshold. The three value pattern is more robust and no noisy data for the efficient feature description.

IV. COMPLETED BINARY AND TERNARY (CB IN TP) FEATURE DESCRIPTOR

In this section we suggest a simple, new, robust recent approach for the feature extraction from the images. The new completed CB in TP descriptor combines the features of LBP and LTP.

Each image is positive by divided into m×n regions, and it is computed for each region by negative histogram. Feature extraction from LBP operations are converted into histogram, similarly Operations of LTP is applied on image and separate individual histogram is generated. The figure 4 illustrates the complete overview on proposed framework CBinTP.

Algorithm: Completed Binary and Ternary coded Pattern
Required : Pre-processed Image
Output : Histogram based Vector representation
Step 1: Compute gradient value of each pixel
Step 2: Find gradient of centre pixel Gc
Step 3: Apply threshold 't' to Neighbour pixel
Gc+t Quantized to 1or Gc-t Quantized to -1
Step 4: Compute Positive and Negative Coded image
Step 5: Split image into mxn region
Step 6: Compute Positive and negative histogram for each region
Step 7: Concatenate histogram from region to form vector representation.

The image cropping is afterwards performed to yield a sub-image of 360×360 pixels by after finding the image centroid. The binary operator is applied on input image and the resultant histogram is the specific output. A label to every pixel of an image by thresholding the 3x3-neighborhood of each pixel by assigned operator with the centre pixel value and as a binary number is considering the result. Then the histogram of the labels can be used as a texture descriptor[7]. Similarly LTP operation is applied and the output of separate histogram is generated. Both have combined together to form a combined features of histogram.

Bychoosing, the training samples among the neighbouring distance by the minimum distance algorithms that are easy classifiers. The distance from the query exampleis to training the every sample is calculated by the classifiers and then picks the greatest neighbour otherwise neighboursthrough the shortest distance.

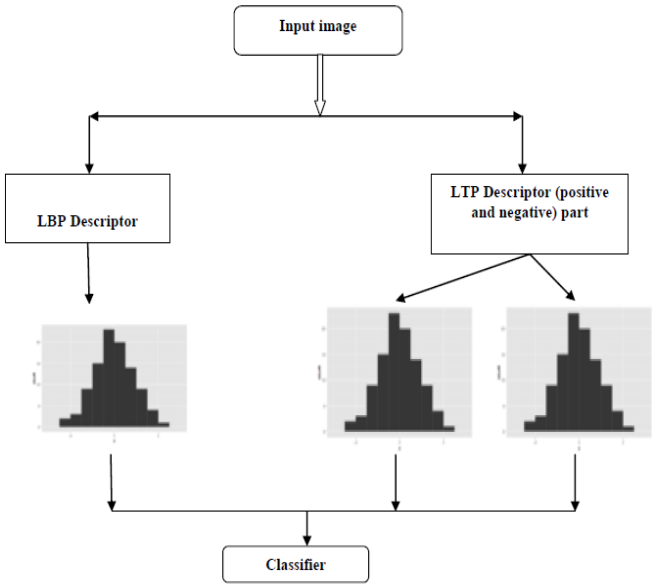

Figure 4Complete LBTP framework

V. CLASSIFICATION USING K-NEAREST NEIGHBOUR

K-nearest neighbouralgorithm considers the feature space and classifies the object in the closest of training examples. In the classification procedure, an unlabelled data object is basically allotted in the direction of the label of its neighbour majority vote. That is the object is assigned to the known label, in which maximum of the nearest neighbour assigns the value. If k=1, the object is basically classified by the object its class nearby to it. A 'k' should be an odd integer and also, it has only two classes. Conversely, when k is an odd integer and it can be still times atthe stageof classification in muticlass.

Published By:
Blue Eyes Intelligence Engineering
and Sciences Publication (BEIESP)

VI. EXPERIMENTAL RESULT

In this proposed work, the NCUT dorsal hand vein database is utilized to experimentationof its performance. A database of 2040 images from Prof. Yiding Wang, North China University of technology (NCUT) (Wang et al, 2010) has obtained along withit is used in this research work.

A dataset of 2040 hand vein images are captured with a resolution of 640 × 480, called North China University of Technology hand-dorsa vein dataset or NCUT dataset. In fact, 10 right and 10 left back of the hand vein images were captured from all 102 subjects, aged from 18 to 29, of which 50 were male whereas 52 were female.

In classification model, K fold cross-validation **(**Kohavi Ron, 1995) is applied. The 10 samples of 102 subjects are divided into 5 equal parts. The 4 set of dataset of classification model is trained and one part is remaining tested. Average error rate of different execution of algorithms is considered as generalization error.

The presentation of the framework of the planned work is estimated with quantifiable measurement. To classify the imagetest data to classes by use of a minimum distance classifier is employed. Similarity between histogram is measured by finding distances. An index of similarity is characterized by distance as that the minimum distance is indistinguishable to the maximum correspondence. Torecognize the distance between two histograms and it can be followed by the distance procedures.

The recognition rate is set by the equation

$$\text{recogntion rate} = \frac{\text{the number of recognized images}}{\text{the number of testing images}}$$

Four distance measures namely Chi – square, Euclidean, City block, Minkowski is used to measure the performance of the system. In Euclidean distance formula, the distance between two points in the plane with coordinates (a,b) with k dimensions is given by,

$$\text{Dist}_{\text{Euclidean}} = \sqrt{\sum_{j=1}^{k}(a_j - b_j)^2}$$

The City block distance is forever greater than or equal to zero. The indistinguishablepoint's measurement should be zero andits points that show little resemblance for high. The two points of City block distance between, a and b, with k dimensions is consideredlike,

$$\text{Dist}_{\text{Cityblock}} = \sum_{j=1}^{k}\left|a_j - b_j\right|$$

Notice, the Minkowski metric providesthat special case of p = 1 in the city block metric and, the Minkowski

metricoffers the Euclidean distance by the special case of p = 2.

$$\text{Dist}_{\text{Minkowski}} = \sqrt[P]{\sum_{j=1}^{k}\left|a_j - b_j\right|^P}$$

The chi-squared distance is practical by it measures up to histograms. The two vectors of distance between in chi-squared is defined as,

$$\text{Dist}_{\text{Chi-Square}} = \sum_{j=1}^{k}\frac{(a_j - b_j)^2}{(a_j + b_j)}$$

Table 1. Recognition rate for NCUT Hand Vein Database – Left & Right Hand Images

Distance Measure		Chi – Square		City block		Euclidean		Min kowski		Chebychev	
		Left	Right	Left	Right	Left	Left	Left	Right	Left	Right
K Fold Cross Validation	Testing Images	Recognition Rate (%)									
K=1	204	96.08	97.06	96.08	93.14	81.37	70.59	87.25	75.49	56.86	51.47
K=2	204	93.14	96.08	91.18	98.04	89.22	83.33	94.12	85.29	66.67	59.80
K=3	204	97.06	96.08	93.14	98.04	91.18	87.25	93.14	82.35	59.80	62.75
K=4	204	96.08	98.04	93.14	91.18	87.25	85.29	82.35	59.80	66.67	51.96
K=5	204	93.14	96.08	93.14	96.08	89.22	87.25	85.29	51.29	59.80	51.96
Avg. Recognition Rate		**95.10**	**96.67**	**93.34**	**95.30**	**87.65**	**82.74**	**88.43**	**70.84**	**61.96**	**55.59**

Table 1, shows the recognition rate of various nearest neighbour classification algorithm. The Chi – Square classification have 95.10 high recognition rate. The proposed approach is also evaluated with reliability performance and it is shown in table 2.

Table 2, exhibits that the chi-square have minimum error rate compared to others.

The NCUT hand vein database is experimented with different descriptors against different classification methods. The results are obtained and it is shown in table 3.

The results in table 3, shows that the CB in TP descriptor performs well with overall recognition rate 95.10%.

Published By:
Blue Eyes Intelligence Engineering
and Sciences Publication (BEIESP)

The approach of Chi-square and CB in TP performs as a best feature descriptor with highest recognition rate. Hence the experiment proves the best performance of proposed approach.

An accuracy of classification is specified as a percentage of exact classifications. Performances of classifiers are evaluated with biometric evaluationschemes like FAR and FRR, ROC curve, and error rate. The system of biometric authentication evaluates biometric data that are enrolled among distinctiveness of a individual person that he claims. Then, the match score is high by means of nearer matching. If the match score go beyond a particularthreshold and followed by the person validating can be established. A genuine users can be rejected by the threshold is set too high. The impostors can be reliable by it is set too low. The system provides errors in two types called FRR and FAR.

Table 2Equal error rate for NCUT hand vein dataset left hand images

Distance Measure	Left	Right
	Equal Error Rate	
Chi-Square	0.05	0.05
Cityblock	0.06	0.06
Euclidean	0.13	0.12
Minkowski	0.18	0.17
Chebychev	0.2	0.2

Table 3 Comparison – NCUT Hand Vein Database

Distance Measure	Chi – Square		Cityblock		Euclidean		Minkowski		Chebychev	
	Left	Right	Left	Right	Left	Right	Left	Right	Left	Right
Methods	Recognition Rate (%)									
LBP	90.68	92.25	87.35	90.88	80.39	84.71	74.80	79.71	76.54	50.80
WLBP	94.79	96.07	93.32	92.05	79.21	50.80	68.03	39.20	74.80	46.70
HOG	94.70	96.27	91.82	93.82	88.92	91.86	86.96	89.50	75.25	71.07
CBinTP	**95.10**	**96.67**	**93.34**	**95.30**	**87.65**	**82.74**	**88.43**	**70.84**	**61.96**	**55.59**

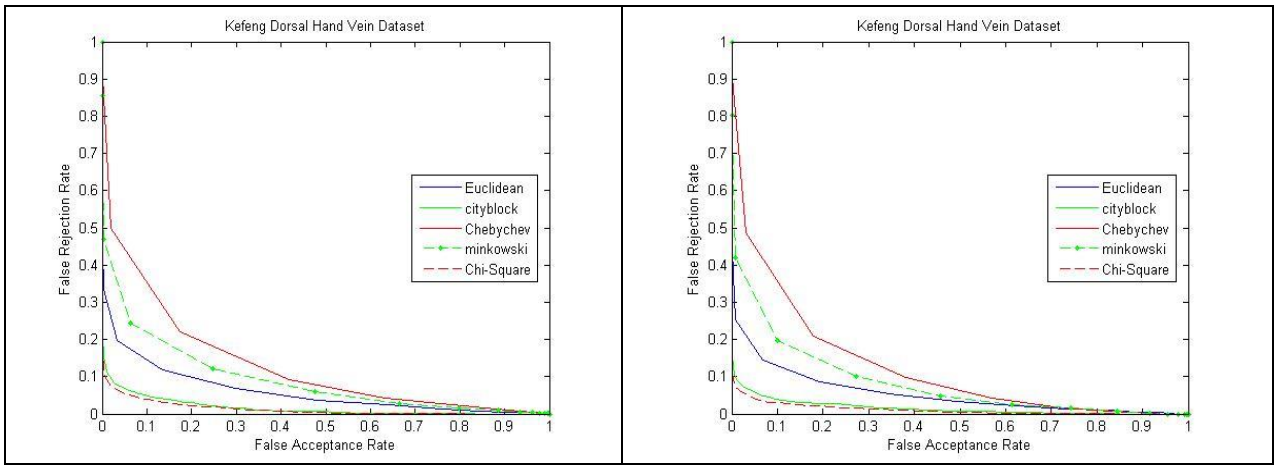

Figure 5. FAR and FRR for left and Right Hand Vein Dataset

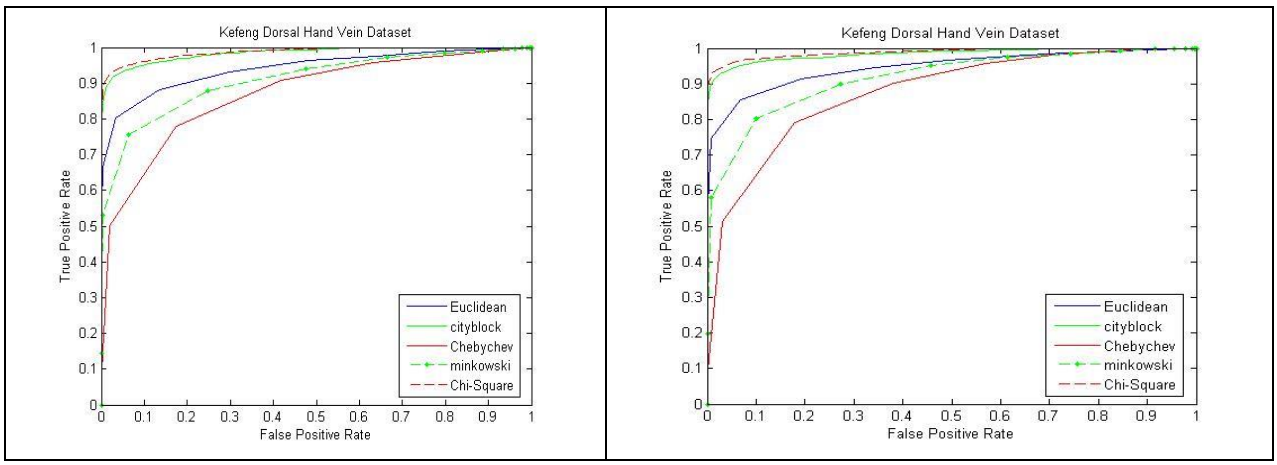

Figure 6 ROC for left and Right Hand Vein Dataset

Published By:
Blue Eyes Intelligence Engineering
and Sciences Publication (BEIESP)

Accuracy of classifier is evaluated by ROC (Receiver Operating Characteristic**).** Here, the true positive rate of a ROC curve (i.e., Sensitivity) is plotted in the false positive rate (100-Specificity) in function used for altered cut-off points of a parameter. In figure 5, the classifier chi-square passes throughout the ROC curve to upper left corner with (100% sensitivity, 100% specificity). Consequently, the upper left corner in the ROC curve is nearer, and the overall accuracy of the test is higher.

VII. CONCLUSION

In this paper, a framework for classification system in biometric by dorsal hand vein patterns are projectedthrough fusion of the components LBP and then LTP Feature Descriptor. This method uses a variety of distance measures like Chi-square, Cityblock, Euclidean, and Murkowski as similarity measure between training and testing images. The experimental results demonstrateto Chi-square distance measure outperformsprevious distance measures through the recognition rate of 95.10% for NCUT Dataset. As well the outcome end results can beobserved among modern algorithms LBP WLBP and also HOG; therefore, proposed work outperforms the existing methods.

REFERENCES

1. T. Ojala, M. Pietikäinen, and D. Harwood, "A comparative study of texture measures with classification based on feature distributions," Pattern Recognition, vol. 29, no. 1, pp. 51–59, 1996. View at Publisher ·View at Google Scholar · View at Scopus
2. M. Heikkil, M. Pietikinen, and C. Schmid, "Description of interest regions with center-symmetric local binary patterns," in Proceedings of 5th Indian Conference of Computer Vision, Graphics and Image Processing, vol. 4338, pp. 58–69, 2006.
3. S. Liao, M. W. K. Law, and A. C. S. Chung, "Dominant local binary patterns for texture classification," IEEE Transactions on Image Processing, vol. 18, no. 5, pp. 1107–1118, 2009. View at Publisher · View at Google Scholar · View at Scopus
4. Tan and B. Triggs, "Enhanced local texture feature sets for face recognition under difficult lighting conditions," IEEE Transactions on Image Processing, vol. 19, no. 6, pp. 1635–1650, 2010. View at Publisher· View at Google Scholar · View at Scopus
5. A.K. Jain, Fundamentals of Digital Signal Processing. Englewood Cliffs, NJ: Prentice- Hall, 1989.
6. G. Zhang, X. Huang, S. Z. Li, Y. Wang, and X. Wu, "Boosting local binary pattern (LBP) based face recognition," in Proc. Advances in Biometric Person Authentication, ser. Lecture
7. C. Shan, S. Gong, and P. W. McGowan, "Robust facial expression recognition using local binary patterns," in Proc. IEEE International Conference on Image Processing, 2005, pp.

Published By:
Blue Eyes Intelligence Engineering and Sciences Publication (BEIESP)