International Journal of Recent Technology and Engineering (IJRTE)
ISSN: 2277-3878 (Online), Volume-7 Issue-4, September 2018

Robot Control by Accelerometer Based Hand Gesture using Arduino Microcontroller

Pankaj Kumar Gautam, Sudhasnhu Pandey, Vishwajeet Kumar Nanda

***Abstract:** Most of robots are controlled by wireless connection (like remote or cell phones) or by direct (wired) connection. In this project work we have designed a robot which is to be controlled by hand gesture of human and an accelerometer is used to move robot according to hand movement. In this work the hardware requirements and complexity has been removed because of not using remote control. Arduino microcontroller makes it a self activated robot, which drives itself according to hand gesture of human standing in front of it. It follows the users hand gesture using accelerometer which makes itself driven robot.*

***Index Terms:** Accelerometer, Arduino-Uno, Hand Gesture, Microcontroller, Robot.*

I. INTRODUCTION

During the last few decades we have seen the emergence of robots capable of performing complex tasks in the human environment. This project makes us advance in the path of making robots in such a way that makes them according to the gestures of the instructor [1].

The aim of this project work is to implement a robot able to act according to the hand gestures of the instructor and to sketch the main challenges and future directions [2]. Designing such kind of robot one needs to consider the following aspects

- Understanding the gesture recognition technology and implementing it in a robot.
- Designing a proper mechanism.
- Selection of actuators and sensors.
- Developing an embedded system to properly manipulate all the actuators.

This robot shall be capable to work on receiving instructions wirelessly. Developing such kind of robots needs:

- Proper mechanical arrangement.
- Actuators (motors) of desired speed and power.
- Power supply.
- Appropriate control system with interface for manual instruction feed.
- Programming and logics.

1.1. Hand Gesture

A hand **gesture** is one form of communication (non-verbal) in which the movement of the part of bodies especially a hand or head or face to express an idea or meaning. Hand Gestures differ from non-verbal communication which does not communicate some specific messages, like facial expressive displays, or displays of joint attention. Hand Gestures allow individuals to communicate (non-verbal) different feelings and thoughts, from contempt and hostility to approval and affection, often together with body language in addition to words when they speak [3].

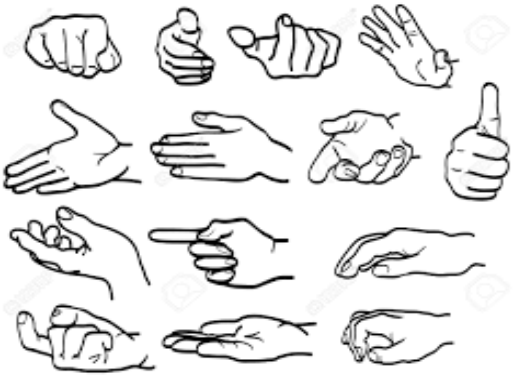

Fig.1.1: Various Hand Gesture Signs

1.2. Hand Gesture Controlled Robot?

Fig.1.2: Hand Gesture Control Robot

A Hand Gesture Controlled robot is one kind of robot which can be controlled by hand movements instead of remote as shown in fig.1.1. A tiny transmitting device is to wear on hand which includes an accelerometer. The device transmits commands to the robot to move according to hand gesture [4].

Revised Manuscript Received on 30 September 2018.
* Correspondence Author
Pankaj Kumar Gautam*, Department of Electrical & Electronics Engineering, Subharti University, Meerut (U.P), India.
Sudhanshu Pandey, Department of Electrical & Electronics Engineering, Dr. A.P.J. Abdul Kalam Technical University, Lucknow (U.P), India.
Vishwajeet Kumar Nanda, Department of Electrical & Electronics Engineering, Dr. A.P.J. Abdul Kalam Technical University, Lucknow (U.P), India.

The transmitting device consists of a comparator IC for converting analog signal to digital signal and one encoder IC(HT12E), to encoding the four bit binary data and then signal is transmitted by an Radio Frequency Transmitter[5].
On the receiving end, the Radio frequency Receiver receives the digital encoded data is being decoded by the decoder IC (HT12D). The micro-controller (Arduino Uno) and motor driver receives encoded data to control the motor movement.
Fig.1.2 shows the robot consisting arduino microcontroller with receiver and human hand gesture wearing transmitter with accelerometer on it.

II. PROBLEM IDENTIFICATION

Developing a robot with motion according to the hand gestures needs a systematic approach to be followed. The design of the body or the framework on which the actuators and the electronic control circuit can be mounted must be done properly.

The next factor is the selection of actuators. Actuators are nothing but motors which provide motion to the robot body as per the signal given to them. In this project normal 100 rpm dc motors are used as their rotation is highly accurate.

Another challenge is designing control circuit with minimum power consumption. The control circuit must be able to receive instructions from the transmitter held by the instructor so that the robot can be controlled. To do so microcontroller is required. Hence microcontroller is to be used for controlling the robot. In this project **Arduino Uno** microcontroller is being used, which is able to convert the analog inputs into digital inputs.

After completing the hardware programming the robot for its motion in such a way that the actuators work simultaneously and the robots balance is maintained.

III. DESIGN AND CONTROL SYSTEM

3.1.1. Mechanical Design

The basic requirement of any robot is its framework or its body on which its complete control circuitry and actuators are to be mounted. In our design our main aim is to move the device according to the hand gestures given by the instructor. So we designed a simple robot which can move forward, backward, turn right and left according to the gestures. The design of the robot is shown in the figure below:

Fig.3.1: Mechanical Design

3.1.2. Control System

Control system for this robot works using microcontroller and various integrated circuits. The control circuit consists of a Microcontroller (Arduino Uno), Encoder IC(HT12E), Decoder IC(HT12D), Transmitter-Receiver module, Motor driver IC(L293D), and an Accelerometer(ADXL335).
The control unit consists of two separate sections-
I. Transmitter section
II. Receiver section
The control system receives data sent from the transmitter section wear by the user. We wear a transmitter module in our hand.
The transmitting device includes:

1. Accelerometer module (ADXL335) which transmits command to the comparator.
2. A microcontroller (Arduino Uno) to receive input from accelerometer and provide output to the Encoder IC.
3. An Encoder IC (HT12E) use to encoding the four bit binary data transmitted to the RF Transmitter module.
4. RF Transmitter module transfers data to the receiver with the help of antenna.

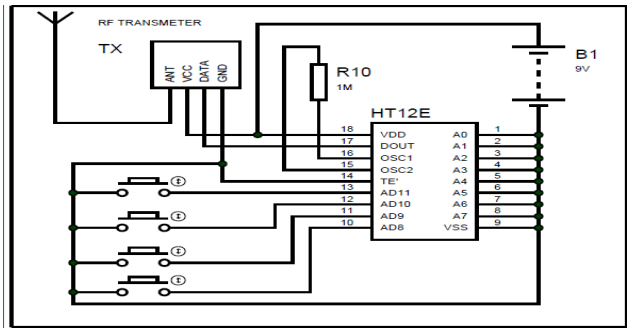

Fig 3.2: Pin Diagram of Transmitter

The receiving device includes:

1. RF Receiver module receives the encoded data with the help of antenna.
2. With the help of decoder IC(HT12D) data is decoded.
3. According to the data, microcontroller sends commands to the motor driving IC (L293D) for controlling purpose.

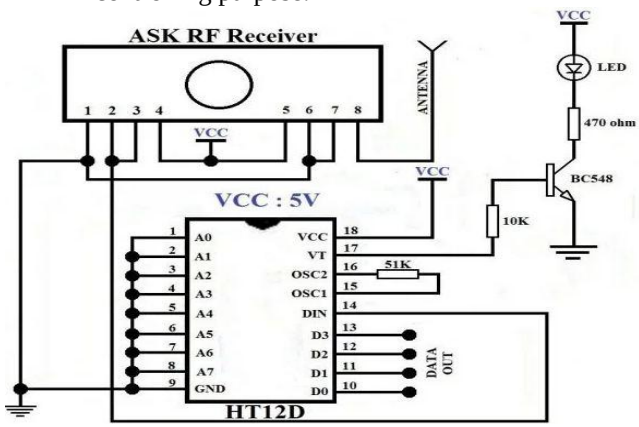

Fig 3.3: Pin Diagram of Receiver

When the user wearing the transmitter tilts his hand or performs some gestures the robot starts moving. When he puts his hand showing his palm towards the robot then the robot starts moving backwards until stopped and when does exactly opposite the robot moves forward. When the user turns his hand 90 degrees measured from the floor with his thumb pointing the roof then the robot turns right and starts moving until stopped and when the robot moves left does exactly opposite then.

3.1.3. Pin Diagram of Arduino Uno Microcontroller

The microcontroller used in this project work is Arduino Uno, which is very popular microcontroller because of easy to wire and program.

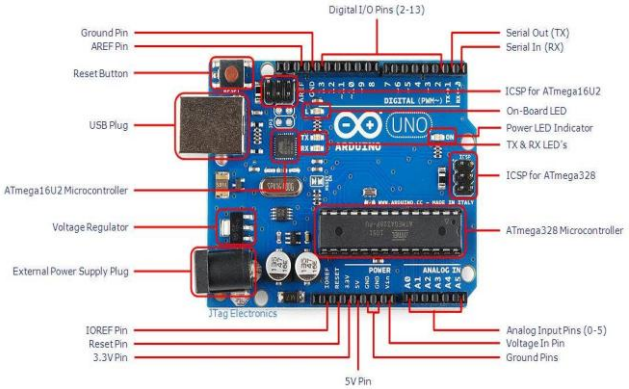

Fig 3.4: Pin diagram of Arduino Uno Microcontroller

Arduino has analog input ports to read from various analog sensors simultaneously and also included with a Serial Data (SDA) line and a Serial Clock (SCL) line. Both the SDA line and SCL line are necessary to support I^2C sensors. This facility makes the Arduino Uno able to read from three various analog sensors and two digital sensors simultaneously. Furthermore, the Arduino Uno includes Serial Peripheral Interface (SPI) function, which allows it to interface with certain peripheral hardware devices, like SD card modules. The Arduino Uno board also allows digital ports for Serial Transmit (TX) and Serial Receive (RX) lines, which necessitate connecting via Bluetooth module [6].

Arduino IDE

The program has been written in Arduino Integrated Development Environment (IDE) v1.6.1 as shown in figure 3.5. and connected to the Arduino hardware to upload programs. Before uploading the program there is a need to select appropriate Microcontroller so, "Arduino Uno" from the Tool menu has been chosen and then for proper communication with computer and Arduino Uno boards there is a need to select COM port from the Tool menu.

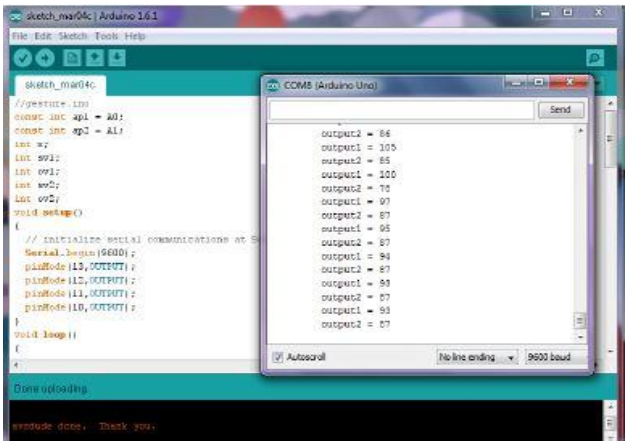

Fig.3.5: Arduino IDE

IV. RF TRANSMITTER AND RECEIVER

The QBT37-XXX transmitter module and QBR37-XXX receiver module are the two miniature narrow band UHF radio modules, which can be used to enable a simple telemetry link at data rates up to 20Kbps.

These modules are available for operations between range of 433.075 and 434.725 MHz in 50 KHz steps making the availability of 34 different frequency channels for transmission at distance of up to 400m.

The applications of these two modules are suitable for one-to-one and multi-node wireless links such as building and car security, remote industrial process monitoring and computer networking. Their small size and low power requirements of both the modules make ideal for use in portable battery powered wireless applications.

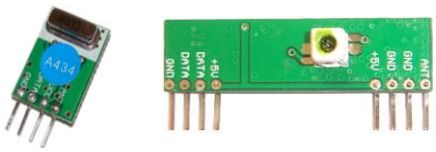

Fig 3.6: (a) RF Transmitter (b) Receiver Module

3.1.4. ACCELEROMETER

A sensor with accelerometer module has been applied here, which senses the axis of direction of the movements of the hand, then the robot starts moving according to the movement of the hand.

On measuring, the static acceleration amount due to gravity, the angle tilted at with respect to the earth is determined. On sensing the dynamic acceleration amount, the way of moving the device is analysed. But measuring tilt angle and acceleration doesn't seem all that exciting. However, researchers have come up with number of ways to make really useful products with them.

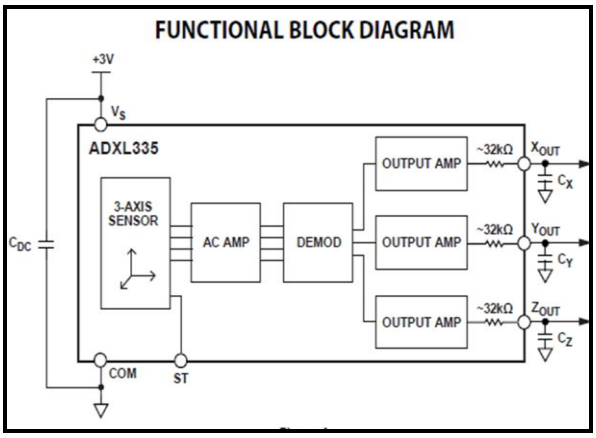

Fig 3.7: Functional Block Diagram of Accelerometer

Fig. 3.7 shows block diagram of accelerometer ADXL335, a small and low power, and thin, a complete 3-axis acceleration meter with signal conditioning output voltages [7]. It can measure the acceleration with a minimum of full-scale range of ±3 g. It can also measure the static and dynamic acceleration of gravity in tilt-sensing applications, and resulting from motion, shock, or vibration respectively.

V. TEST AND PROCEDURE

Because of transmitter device wearing on hand and receiver on the robot, the robot starts moving according to the movement of hand gestures. In this paper, we have explained about the 5 different hand gesture or movement positions i.e. stop condition, forward movement, backward movement, moves towards right and moves towards left.

4.1. Stop Condition

The robot can be stopped by making the accelerometer parallel to the horizontal plane; this makes all the output pins of decoder (13, 12, 11, 10) set to high.

4.2 Forward Movement

The robot starts moving in forward direction, by making accelerometer tilted to forward direction, this condition sets the two output pin of decoder (13, 11) to low and set high on the other two output pin of decoder (12, 10).

4.3 Backward Movement

The robot starts moving in forward direction, by making accelerometer tilted to forward direction (upwards), this condition sets the two output pin of decoder (13, 11) to high and set low on the other two output pin of decoder (12, 10).

4.4 Moves towards Right

The robot starts move towards right side by tilting the accelerometer towards right, and this makes the two output pin of decoder (12, 11) low and other two output pin of decoder (13, 10) high.

4.5 Moves towards Left

The robot starts move towards left side by tilting the accelerometer towards left, and this makes the two output pin of decoder (12, 11) high and other two output pin of decoder (13, 10) low.

VI. CONCLUSION

In our project we have added special features by which our robot can overcome so many problems in industry. If it is further developed then it can be used for military application. A Gesture Controlled robot with Arduino Uno microcontroller has been designed in this work, which can be controlled by human hand gestures. This requires to wear a small transmitting device on our hand included an accelerometer, which transmits particular commands to the robot to move according to the users hand gesture and one receiver at the robot.

FUTURE SCOPE

This project can be enhanced using voice circuit in this for deaf and dumb people. Voice circuit converts gestures into voice. With voice circuit implemented this will be useful for Animal Planet, Discovery people for their studies on animals by playing different sounds & for their exploration. Further we can add GPRS and GPS modules for place location. We can add video camera for live streaming. We can add bomb and metal detectors and can send to place, harmful for a person to go. This type of hand gesture system can be developed for whole body and can be used in military operations.

REFERENCES

1. H.J. Boehme, A .Brakensiek, U.D. Braumann, M. Krabbes, and H.M. Gross. “Neural networks for gesture based remote control of a mobile robot”. In Proc.1998 IEEE World Congress on Computational Intelligence WCCI 1998 – IJCNN 1998, pages 372-377, Anchorage, 1998. IEEE Computer Society Press.
2. L. Bretzner, I. Laptev, and T. Lindberg, "Hand Gesture Recognition using Multi-Scale Color Features, Hierarchical Models and Particle Filtering", IEEE International Conf. on Automatic Face and Gesture Recognition, 2002.
3. R. Rosales, V. Athitsos, L. Sigal, and S. Sclaroff, "3D Hand Pose Reconstruction Using Specialized Mappings", IEEE International Con. on Computer Vision, pp. 378- 385, 2001.
4. “Accelerometer-Based Control of an Industrial Robotic Arm” Pedro Neto, J. Norberto Pires, Member, IEEE, and A. Paulo Moreira, Member, IEEE.
5. Y. Cui and J.J. Weng. “Hand sign recognition from intensity image sequences with complex backgrouns”. In Proceedings of the Second International Conference on Automatic Face and Gesture Recognition, Killington, Vermont, 1996.
6. www.arduino.com.
7. www.analog.com/static/imported- files/data_sheets/ADXL335.pdf.

Pankaj Kumar Gautam did M.Tech. Electrical Engineering (System Engineering & Operations Research) from IIT Roorkee, Uttarakhand in 2010 and B. Tech. in Electronics & Instrumentation Engineering from MJP Rohilkhand University Bareilly India. His areas of research are Control System, Optimization techniques, Fuzzy logic control and Artificial Intelligence.

Sudhanshu Pandey did B.Tech.(Electrical & Electronics Engineering) from APJ Abdul Kalam Technical University, Lucknow in 2018. His area of interest is artificial intelligence.

Vishwajeet Kumar Nanda did B.Tech. (Electrical & Electronics Engineering) from APJ Abdul Kalam Technical University, Lucknow in 2018. His area of interest is artificial intelligence.