International Journal of Recent Technology and Engineering (IJRTE)
ISSN: 2277-3878 (Online), Volume-7 Issue-2, May 2018

Fault Current Limitation by using Series Transformer

Omkar Shivaji Mohite, Aditya Vilas Kumbhar, Mangesh Dhananjay Kulkarni, Ajit Vasant Ghadage, Kale R.U.

***Abstract:** This paper related to fault current limitation in radial distribution of network. In order to control fault current, primary winding of an isolation transformer is connected in series with phase line and secondary winding is connected to inductive coil (reactor), which is connected in parallel with a bypass switch. This is of parallel insulated gate bipolar transistor (IGBT). This system can improve the power quality of power system. This system also gives un- interrupted power supply. The magnitude of the current is reduced due to reactor connected in secondary winding. Because of simple structure cost is very low. This system is designed for single phase 230 volts, 50Hz ac supply.*

***Index Terms:** Isolation Transformer, Arduino UNO, Reactor, uninterruptable supply.*

I. INTRODUCTION

Due to expansion of power system networks complexity in the system is increased. So temporary faults in the system are increasing nowadays. Consumers are suffering from continuous interruption of supply. Transient faults having larger magnitude that may damage protective equipments which are costlier .Fault current limitation by using series transformer has lower losses than series reactor based technology. This system can reduces voltage sag in supply voltage, also improve power quality. This system can remove fault current without interrupting supply lines. A 1:1 ratio isolation transformer has primary winding is continuously connected in series with phase line. The secondary winding is connected to reactor in parallel with insulated gate bipolar transistor (IGBT). The system is designed for single phase system.

Revised Manuscript Received on 30 May 2018.
* Correspondence Author
Omkar Shivaji Mohite, Department of Electrical Engineering, Savitribai Phule Pune University/ S.B. Patil College of Engineering/Pune, India, E-mail: omkarmohite505@gamil.com
Aditya Vilas Kumbhar, Department of Electrical Engineering, Savitribai Phule Pune University/ S.B. Patil College of Engineering/Pune, India, E-mail: adityakumbhar101@gamil.com
Mangesh Dhananjay Kulkrani, Department of Electrical Engineering, Savitribai Phule Pune University/ S.B.Patil College of Engineering/ Pune, India, E-mail: mangeshkulkrani703@gamil.com
Ajit Vasant Ghadage, Department of Electrical Engineering, Savitribai Phule Pune University/ S.B. Patil College of Engineering/Pune, India, E-mail: ajitghadage96@gamil.com
Prof. Rahul Kale , Department of Electrical Engineering, Savitribai Phule Pune, University/ S.B. Patil College of Engineering/ Pune, India, E-mail: prahulkale@rediffmail.com

A. Problem Statement

Currently Due to small duration faults or supply fluctuation the supply will fails due to circuit breaker tripping and consumer will be disturbed many times. Short circuit of line also results in transient over-voltages which may affect to sensitive equipment.

II. PROJECT OBJECTIVE

1. To reduce magnitude of fault current to greater level.
2. To avoid continuous interruption of supply.
3. Improve transient stability, power quality, and reliability.
4. Improve power quality.
5. To maintain voltage profile.

III. PROJECT SCOPE

1. Installation in radial distribution network.
2. Replacement of FACTS devices.
3. In sensitive equipment area which requires continuous Supply.

IV. SYSTEM CONCEPT

A. Block Diagram

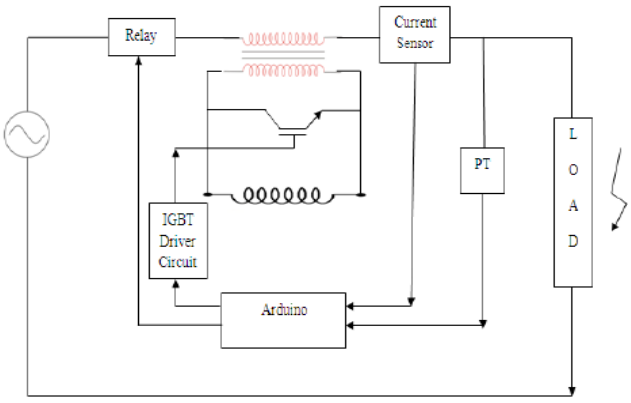

Fig 1. Block Diagram of Fault Current Limitation by using Series Transformer

Block Description

1) Isolation Transformer

Winding Turn Ratio Used: - 1:1
Type of Transformer: - Dry Type/Air Cooled
Phases: - Single Phase
200 VA or 0.2 KVA
230 volt, 50/60 Hz
Isolation Transformer
Full load current: - 0.86 Amp

2) Arduino
Microcontroller ATmega328
Operating Voltage 5V
Input Voltage (recommended) 7-12V
Input Voltage (limits) 6-20V
Digital I/O Pins 14 (of which 6 provide PWM output)
Analog Input Pins 6

3) Current Sensor
The ACS712 Current Sensors offered on the internet are designed to be easily used with microcontrollers like the Arduino. These sensors are based on the Allegro ACS712ELC chip. These current sensors are offered with full scale values of 5A, 20A and 30A.

4) Load
Resistive type load used_ Incandescent Lamp

V. WORKING

1) In Normal Mode: - The line or load current flows through primary winding and secondary winding is shirt circuited. The primary winding is continuously in operation.
In normal mode safe current range is 0.9 Amp.
2) In Abnormal Mode: - The primary winding can carry line or load current but secondary winding is connected to Reactor with opening IGBT switch to limit magnitude of fault current to greater level.

When current greater than 1 Amp system goes to faulty mode. Transformer Secondary side reactor added to circuit & fault current chopped. If fault current greater than 60 Seconds then main supply directly OFF through relay.

In order to control the fault current, primary winding of an isolating transformer is connected in series with the line and the secondary side is connected to a reactor, paralleled with a bypass switch which is made of anti-parallel insulated gate bipolar transistors (IGBT). By controlling the magnitude of ac reactor current, the fault current is reduced and voltage of the terminal point is kept at a reference level (230 volts). Also, by this switching overvoltage is reduced significantly.
It can improve the power quality and also, due to its simple construction, the cost is very low. This system limits the fault current without negligible delay, smooth the fault current waveform, and improve the power quality.
Flow Chart: -

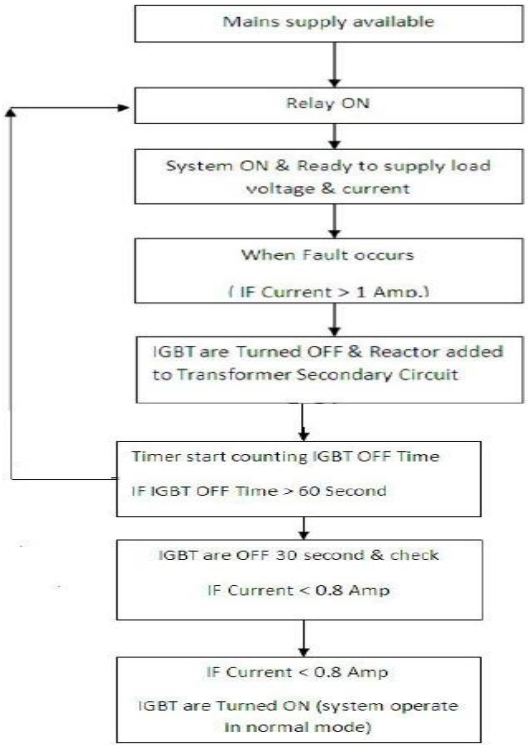

VI. RESULT

Condition	Normal	Abnormal
Initial current value	0.9 Amp	1.0 Amp
Current value after reactor chopping	------	0.6 Amp

Losses occurred in the proposed system: - 5 %(power loss)

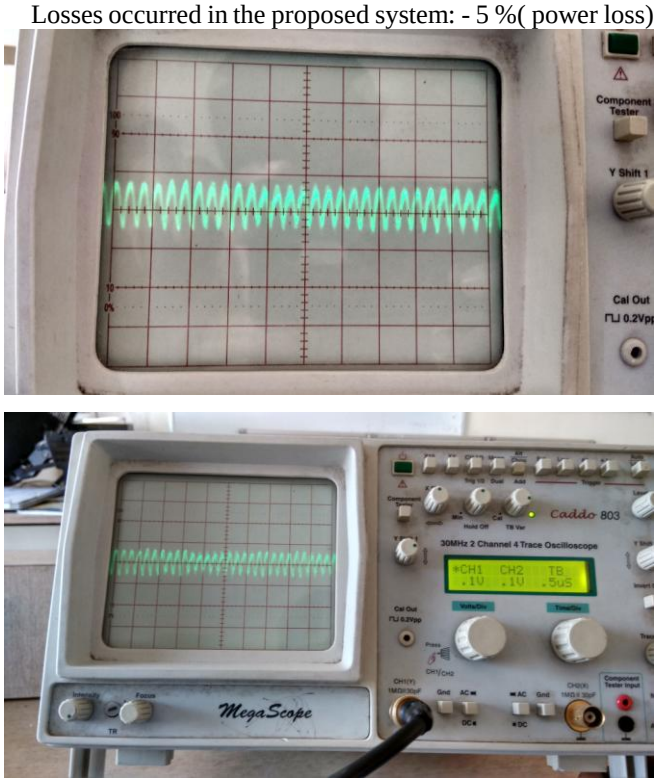

Fig 2. Picture (laboratory result). IGBT switching voltage Waveform

Published By:
Blue Eyes Intelligence Engineering
and Sciences Publication (BEIESP)

VII. CONCLUSION

The main advantages of the proposed Fault Current Limitation by using series transformer is chopping of larger fault current magnitude, mitigate voltage sag. Simpler structure also guaranties safe and reliable operation, also lowers the cost. This system is useful in radial distribution network application.

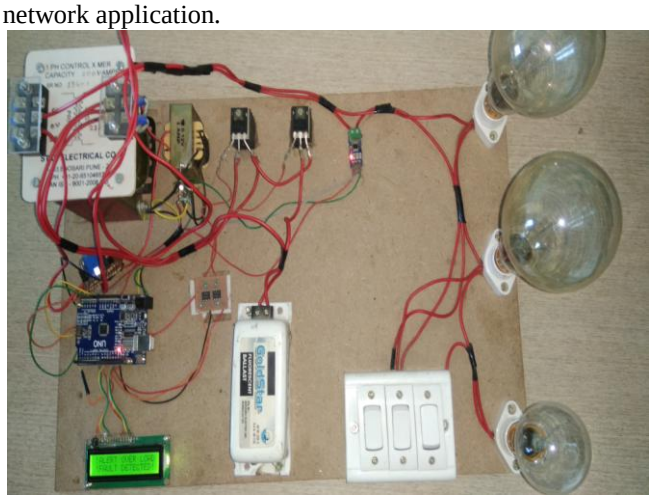

Fig 3. Picture 1 Project Setup

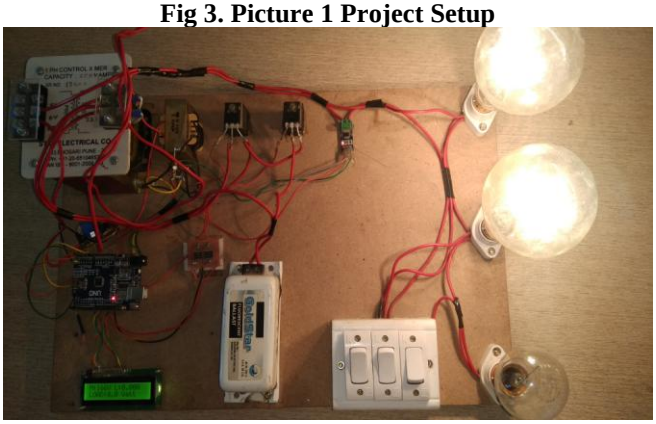

Fig 4. Picture Normal Condition

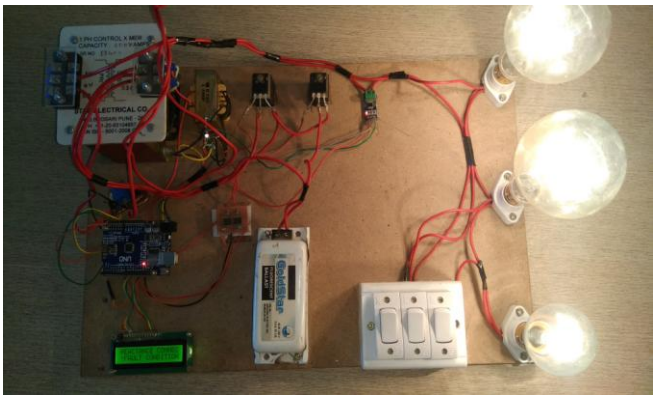

Fig 5. Picture Abnormal Condition

REFERENCES

1. M. T. Hagh and M. Abapour, "DC reactor type transformer inrush current limiter," IET Elect. Power Appl., vol. 1, no. 5, pp. 808–814, Sep. 2007.
2. IEEE Paper 2015 by Hamid Radmanesh "Series Transformer-Based Solid State Fault Current Limiter"
3. www.Electronics foryou.com.
4. "Power System & its faults" book by J.B. Gupta

AUTHORS PROFILE

Omkar Shivaji Mohite, B.E. in Electrical Engineering, Savitribai Phule Pune University/ S.B. Patil College Of Engineering/Pune, India.

Aditya Vilas Kumbhar, B.E. in Electrical Engineering, Savitribai Phule Pune University/ S.B. Patil College Of Engineering/Pune, India.

Mangesh Dhananjay Kulkrani, B.E. in Electrical Engineering, Savitribai Phule Pune University/ S.B.Patil College Of Engineering/ Pune, India.

Ajit Vasant Ghadage, B.E. in Electrical Engineering, Savitribai Phule Pune University/ S.B. Patil College Of Engineering/Pune, India.

Prof. Rahul Kale , M.E. in Electronics Engineering, Savitribai Phule Pune, University/ S.B. Patil College Of Engineering/ Pune, India.

Published By:
Blue Eyes Intelligence Engineering and Sciences Publication (BEIESP)