International Journal of Recent Technology and Engineering (IJRTE)
ISSN: 2277-3878 (Online), Volume-6 Issue-1, March 2017

Design and Fabrication of 0.5mm KLICK Pencil Assembly Machine

Ashish Chaudhari, Hemant Isai, Sumit Jha, Abhijeet Shetake, Mitesh Thakkar

***Abstract:** This work aims at design and development of Special Purpose Mechanism for assembly of 0.5mm klick lead pencil for KOKUYO CAMLIN LTD. The important assembly stations consists of feeding the lead on the assembled pencil with barrel and chuck with the help of special fixture and pneumatic circuit followed by mounting cylindrical eraser over the pencil barrel and at last pencil cap for feeding the lead forward during working. All the three operations are simultaneously carried out over the turn table which rotates in forward step and dwell period with use of special Geneva Mechanism. The design of jigs, fixtures and pneumatic circuits will be done on Solid Works and simulated using ANSYS if necessary. The designed component will be then manufactured and fabricated at KOKUYO CAMLIN CAMPUS at Vasai Road and will be tested for the product. The results expected will be less assembly time and faster work production which saves human errors, electricity and time of production.*

***Keywords:** SPM, Chuck, Jig & Fixtures, Geneva Mechanism.*

I. INTRODUCTION

Now days to withstand competition of corporate world, marketing cost of product should be minimum as compared to competitor, with providing excellent quality of product. To maintain the balance between quality Excellency and dual profitable cost, the manufacturer needs to be updating the technology. The automation is necessary for this purpose. Every mega factories also small entrepreneur is therefore titled towards the installation "special purpose machine" for fulfilment of their manufacturing requirement.

The project is about design and manufacturing of jig and fixtures. The design and manufacturing operations are performed station wise. The roadmap to reach the destination of our project will be as follows:

Revised Manuscript Received on 30 March 2017.
***** Correspondence Author
Ashish Chaudhari*, Department of Mechanical Engineering, Vidyavardhini's College of Engineering and Technology, Vasai (Maharashtra)-401202, India.
Hemant Isai, Department of Mechanical Engineering, Vidyavardhini's College of Engineering and Technology, Vasai (Maharashtra)-401202, India.
Sumit Jha, Department of Mechanical Engineering, Vidyavardhini's College of Engineering and Technology, Vasai (Maharashtra)-401202, India.
Abhijeet Shetake, Department of Mechanical Engineering, Vidyavardhini's College of Engineering and Technology, Vasai (Maharashtra)-401202, India.
Mitesh Thakkar, Department of Mechanical Engineering, Vidyavardhini's College of Engineering and Technology, Vasai (Maharashtra)-401202, India.

© The Authors. Published by Blue Eyes Intelligence Engineering and Sciences Publication (BEIESP). This is an open access article under the CC-BY-NC-ND license http://creativecommons.org/licenses/by-nc-nd/4.0/

This work aims at design and development of Special Purpose Machine (SPM) for assembly of "0.5mm Klick Pencil Assembly Machine" parts. The parts to be assembled are:

- Lead
- Eraser
- Eraser Cap

II. MOTIVATION

In this world of competition time and speed are important parameter in each field. In production line speed and time are inversely proportional parameters, which mean production speed must be high enough to consume less time, with best the quality of product. Engineers are constantly working on the fulfillment of this purpose. The project is related to idea. It is slightly on the other way of above parameters along with them. "0.5mm Klick Pencil Assembly Machine" aims at reduction in labour cost with increment in profit. As a future engineer we are going to try our best at professional levels. "0.5mm Klick Pencil " is actually automation based project,which aims at reducing the labour cost which in turn increases profit of company.In current time, the assembly of mechanical pencil takes place manually.

III. DEFINITION PROBLEM

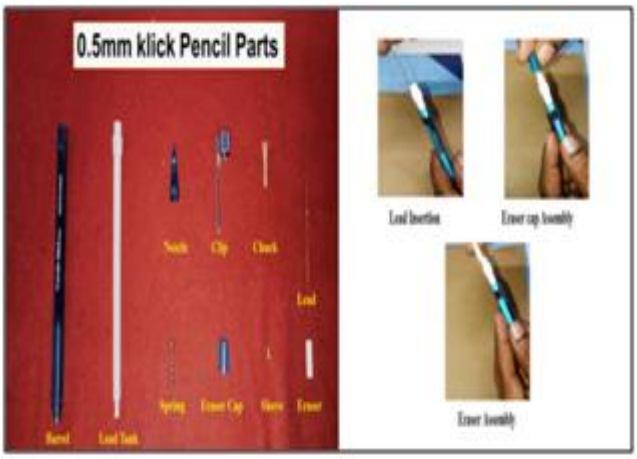

Fig. 0.5mm Klick Pencil Parts

The 0.5mm Klick Pencil consists of 10 parts as mentioned in above fig. Currently, the assembling of parts i.e., Lead, Eraser, Eraser Cap is carried out manually as shown in above fig., involves 16 manpower which results in:

- Slow production rate
- High production cost
- Lead breakage

To overcome the above problems, we decided to automate the process i.e., to develop the special purpose machine for the assembly of parts which are Lead, Eraser, Eraser Cap.

IV. METHODOLOGY

Working:

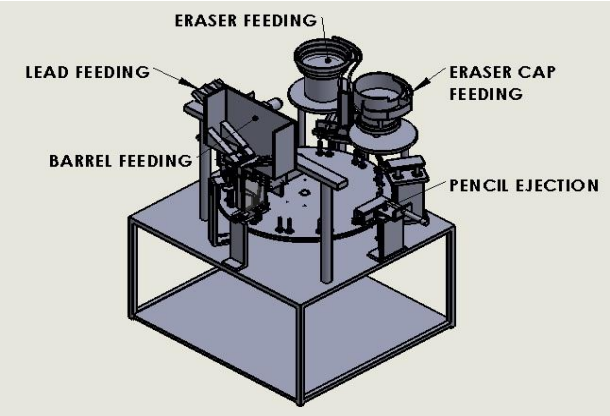

Image 1.

Image 2.

Above images shows the solid edge model and the developed machine. All the design and analysis work is performed on SOLIDWORKS software.The machine consists of Geneva mechanism for indexing of rotary disc for making regular interval stop for disc to perform various operation station wise. Jigs are designed for pencil holding purpose. The assembly process consists of five operations. first operation starts with feeding of pencil barrel into the jigs through hopper. Pneumatic actuators and guide fixtures are used for smooth flow of barrel into hopper. Then the second operation is lead feeding in the barrel. the special mechanism is developed for the lead feeding purpose. Next operation is eraser feeding, for this purpose feeder bowl is used and linear and stopper arrangement is designed for putting the eraser on the pencil barrel. Then the next operation is eraser cap feeding .finally the last operation is ejection of finished pencil from jigs.

A. Components:

Following components are utilized in the machine:

- Pneumatic cylinder
- Jigs and Fixtures
- Pneumatic Fingers
- Slider
- Proximity Sensors and Controller
- Bearings

V. THEORETICAL EVALUATION

B. Pencil Feeding Hopper Calculation:

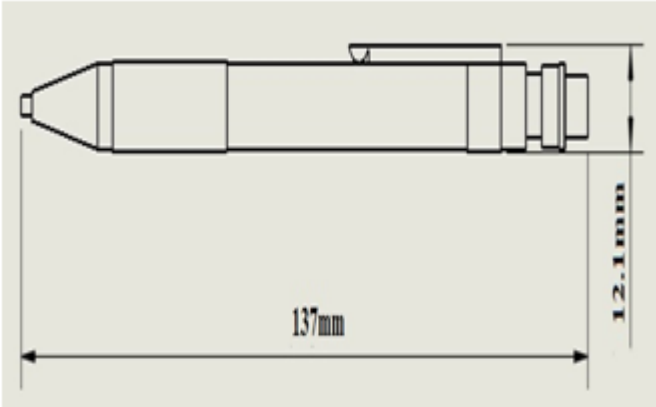

Fig 3. Pencil

- **Volume of Pencil:**
  Diameter of Pencil= D= 12.1 mm
  Length of Pencil= L=137 mm
  Taking 5mm clearance,
  L=137+5=142 mm
  Considering Pencil a Cylinder,
- Volume of 1 Pencil=$\frac{\pi}{4}D^2L$ ….(eqn. no.1)

$$=\frac{\pi}{4}12.1^2 \times 142$$

$$=16.28\ cm^3$$

C. Pencil Hopper:

Hoppers are used for the temporary storage of materials. It is a container type thing in which raw material is feeded at the initial stage. They are design so that stored material can be dumped or fed to a process easily. Most hoppers are made of steel.In our case, Hopper is the first station in which pencil barrels is feeded.

D. Calculation for Pencil Hopper Capacity:

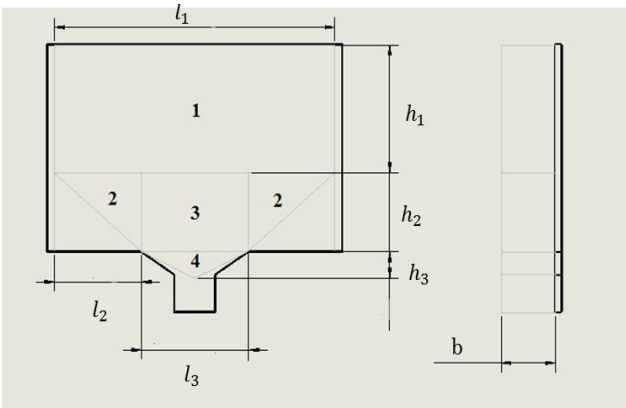

Fig. 4. Hopper Components For barrel

E. Volume of Hopper:

Volume of Part-1(Rectangle), $V_1 = l_1 \times h_1 \times b$ …..(eqn. no.2)

Volume of Part-2(Right Angle Triangle),

$V_2 = 2 \times \frac{1}{2} \times l_2 \times h_2 \times b$……(eqn. no.3)

Volume of Part-3(Rectangle), $V_3 = l_3 \times h_2 \times b$ …….. (eqn. no.4)

Volume of Part-4(Right Angle Triangle),

$V_4 = \frac{1}{2} \times l_3 \times h_3 \times b$ …….. (eqn. no.5)

Total Volume of hopper = $V_1 + V_2 + V_3 + V_4$ ……. (eqn. no.6)

F. Lead Hopper:

Leads are fed into the Lead Hopper so that they can be drawn into the pencil barrel. Two drums are used in the lead hopper which have a single slot on each of them so that lead can be fed properly in the drum. As the drum rotates, lead can be fed into the pencil barrel.

G. Lead Feeding Hopper Calculation:

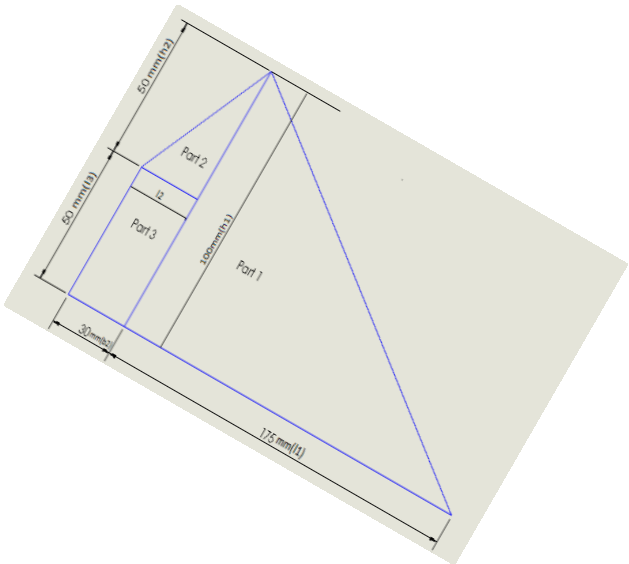

Fig 5. Hopper Components for Lead

Volume of Hopper:

Volume of part 1 = $\frac{1}{2} \times l_1 \times h_1 \times$ w ……(eqn. no.7)

Volume of part 2 = $\frac{1}{2} \times l_2 \times h_2 \times$w ……(eqn. no.8)

Volume of part 3 = $l_3 \times b_2 \times$ w ……(eqn. no.9)

Volume of Lead:

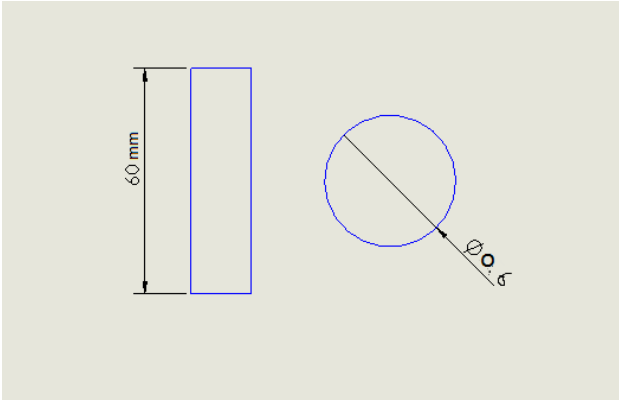

'Volume of LEAD = $\frac{\pi}{4} \times d^2 \times$l ……(eqn. no.10)

H. Calculations for the Drum Speed (Angular Velocity):

Drum is part of lead feeding mechanism ,in which slot is provided in which lead is inserts and as the drum rotates along with lead it sends the lead into the guide path provided on its front side which further feeds the lead into the barrel. The speed control motor is used for drum rotation purpose.

In 1 min, 18 jigs are passed through one station.

∴ In one min., 18 lead should be fed by the lead drum.

As there are 2 slot in a drum,

∴ Speed of the Drum = $\frac{18}{2}$ = 9 rpm.

Angular Speed, $\omega = \frac{2\pi n}{60}$ ……(eqn. no.11)

$= \frac{2\pi \times 9}{60}$

= 0.942 rad/sec.

I. Pillars:

Pillars are two vertical structures which is mounted on the machine bed. It supports the pencil barrel hopper from back side. Pillars can sustain heavy vibrations during the machine operations.

J. DESIGN OF PILLAR:

In design of pillar, the stress analysis is involved which is performed on the SOLIDWORKS software. also the buckling effect is calculated. Theoretically the stress analysis is performed with shear force and bending moment diagram .and the pillars are selected on the basis of results obtained.

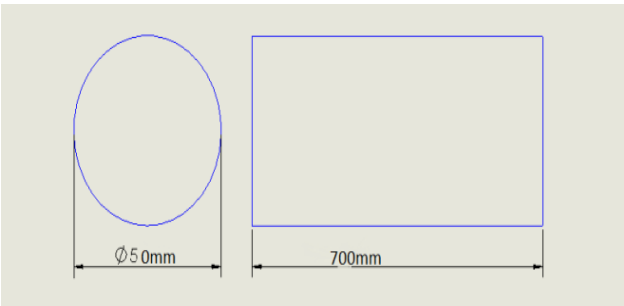

Critical Buckling load is given by,

$$P_{cr} = \frac{\pi^2 \times E \times A}{\left(\frac{L}{C_r}\right)^2} \quad \text{……..(eqn. no.12)}$$

VI. RESULTS

1. Reduction in manpower.
2. Reduction in space requirement.
3. Precise operation.
4. Reduction in overall cost of assembly process.
5. Reduction in time.
6. Fabrication cost of machine will overcome within one month.
7. Reduction in rejection rate.

VII. CONCLUSION

In this thesis, the assembly line is modified from manual to automation .to fulfill this purpose, an assembly machine is developed at very low cost, with a payback period of less than one month. before process automation, the required manpower for the product(Mechanical Pencil) assembly was 16 persons. Now, after the development of machine, we have successfully reduced 15 manpowers. Now only one operator will be required to handle the machine. The productivity is improved by 40%, it is a very great achievement in field of process automation.

REFERENCES

1. Alsterman, H. (2010)" Operations Management:MG2205" [Lecture Notes] Stockholm, Sweden: KungligaTekniskahögskolan, Department of Production Engineering
2. REDDAM A., Emre O. "A case study brought out at Electrolux"
3. GrooverMikell P. "Automation, Production systems and Computer integrated Manufacturing"
4. Kenneth Waldron, Gary Kinzel "Kinematics, Dynamics and Design of Machinery" 2nd ed., , Wiley India Edition
5. Bhandari V. B. "Design of machine elements" Tata McGraw Hill Pub.