International Journal of Recent Technology and Engineering (IJRTE)
ISSN: 2277-3878 (Online), Volume-4 Issue-3, July 2015

Biometric Authentication of Individual using M-Wave Signals

Samer Chantaf, Amine Naït-Ali, Mahmoud Abbas, Mohamad Khalil

***Abstract* —This paper suggests a new biometric method of human verification based on muscle response following an electrical stimulation is presented in this study. The corresponding response is called M-wave. The goal is to study the possibility of using the M-wave signals to verify an individual. In this work, parameters are extracted by modeling the M-waves using wavelet networks. The radial basis neural network method is then used to classify these parameters. This method has been evaluated on a set of M-wave responses corresponding to normal individuals. Consequently, very encouraging results have been obtained.**

***Index Terms* — M-wave; biometrics; wavelet networks; neural network; classification.**

I. INTRODUCTION

Biometrics refers to the automatic authentication or verification of living persons using their enduring physical or behavioral characteristics. Many body parts, personal characteristics and imaging methods have been suggested and used for biometric systems such as: fingers, hands, feet, faces, eyes, ears, teeth, veins, voices, signatures, typing styles, gaits and odors [1]. Recently physiological signals, such as ECG [8-11], are used in biometric authentication. New research shows that EMG signal could be used to verify individuals. An electromyogram (EMG) is a test that measures the electrical activity in the nerves and muscles at rest and during contraction. EMG consists of two parts. The first part is nerve conduction studies**,** which measure the ability of specific nerves to transmit electrical impulses, or messages to muscles. The second part is needle electrode examinations**,** which measure the electrical activity in muscles. Nerves control the muscles in the body by electrical signals, and these impulses make the muscles react in specific ways. Nerve and muscle disorders cause the muscles to react in abnormal ways. The action of nerves and muscle is essentially electrical.

Revised Manuscript Received on 30 July 2015.
***** Correspondence Author
Dr. Samer Chantaf*, Department of Computer Communication and Networks Engineering, Lebanese University, University Institute of Technology, Saida, Lebanon.
Prof. Amine Nait-Ali, Laboratoire Images Signaux et Systèmes Intelligents (LISSI, EA 3956), Université Paris-Est Créteil (UPEC), Créteil, France.
Dr. Mahmoud Abbas, Department of Computer Communication and Networks Engineering, Lebanese University, University Institute of Technology, Saida, Lebanon.
Prof. Mohamad Khalil, Lebanese University, Doctoral School for Sciences and Technology, Tripoli, Lebanon.

Information is transmitted along nerves as a series of electrical discharges carrying information in pulse repetition frequency. This may be in the range of 1 to 100 pulses/s. Contraction of muscle fibers is also associated with an electrical discharge which can be detected by measuring electrodes or brought about by electrical stimulation.
Many EMG tests involve the use of stimulators to induce discharges in a nerve trunk, and detect the response by surface electrodes over a muscle served by that nerve. The basic concept of nerve stimulation is that when a nerve is electrically stimulated a reaction should occur somewhere along the nerve itself. Normally a peripheral nerve can be easily stimulated if the stimulus source can be applied near the nerve. Thus, most nerve stimulation is done to segments of nerve that lie close to the skin surface. Due to the necessity of proximity, the number of nerves accessible to stimulation and the locations of the stimulation of that nerve are limited. An insulated needle electrode is lodged near the nerve with its uninsulated tip in order to stimulate nerves deep the skin. The sites of stimulation depend on the nerve's anatomy. Some nerves may be only accessible at one point whereas others may be stimulated at three or four points along their course. Electromyogram and nerve conduction tests are performed at the same time. The nerve conduction study consists of the following components: Motor NCS (Nerve Conduction Study), Sensory NCS, F-wave study and H-reflex study. In our work, by the Motor response resulting from the Motor NCS will be used to verify individuals.

- ***Motor Nerve Conduction Studies (Motor NCS)***

To examine the conduction properties of motor nerve fibers, a mixed nerve is electrically stimulated with a single, short duration stimulus. The action potentials are generated in alpha motoneurons axons which innervate extrafusal muscle fibers of skeletal muscle and are directly responsible for initiating their contraction. The evoked nerve action potentials propagate along the motor fibers and activate the neuromuscular junctions of the stimulated motor axons. Synaptic transmission at the neuromuscular junctions between motor axons and muscle fibers produces muscle action potentials on innervated muscle fibers and triggers a twitch contraction in the muscle fibers. In motor NCS, the wave that precedes the actual muscle contraction is measured. This wave is called the M wave. The amplitude of this wave is proportional to the number of muscle fibers depolarized, and hence is a reflection of the extent of activation of muscle fibers produced as a result of motor nerve stimulation. As the current amplitude increases during motor nerve stimulation, more motor axons are progressively recruited and a maximum twitch contraction is produced. Further increases in stimulus

Published By:
Blue Eyes Intelligence Engineering and Sciences Publication (BEIESP)

amplitude will not increase the amplitude of the M response. At this point, all the stimutated motor axons were excited, the maximum number of neuromuscular junctions was triggered, and action were potentials are generated on the membranes of all innervated muscle fibers [13]. In this paper, new biometric method is presented based on M waves. This method consists of modeling the M-waves by wavelet network in order to extract the significant parameters (translation, dilation and weight) from different wavelets. These parameters were used to verify individuals. In section 2, the material and methods are presented. The protocol is described in section 3. In section 4, results are provided and discussed. Finally in section 5, the conclusion is presented.

II. MATERIAL AND METHOD

In this section, the material and methods used to identify individuals using M-waves are presented.

A. M-wave response

The M-waves are recorded from ten healthy individuals (8 males and 2 females) by the KEYPOINT system. The M-waves are obtained in response to an electrical stimulation of intensity 20 mA and 30 mA at different moments during nine months. Our database is composed of ten folders for each person, five folders of M-waves in response to a stimulation of each intensity. Each folder contains 20 simultaneous responses sampled at 1 Hz. The different phases are described in the following sub-section (Figure 1).

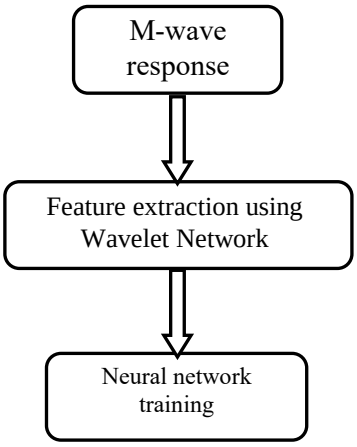

Fig. 1 Block diagram showing the main steps required to verify individuals by their M-wave response.

The method consists first of modeling the M-waves by using wavelet network in order to extract the significant features (translation, dilation and weight) from different wavelets.

B. Wavelet Neural Network

Wavelet networks are a class of neural networks inspired from Feedforward multilayer neural network [2-4]. Where wavelet functions are used as activation functions. The methods of construction of the network are developed using the theoretical characteristics of wavelet transform. The use of wavelets in neural networks has been proposed by the two references [3-4]. The considered wavelets are non orthogonal but form a frame. In such case, the wavelet network is considered as a special case of RBFNN [5] presented as a wavelet network based on an orthonormal basis. Wavelet networks are feedforward multilayer networks made up of three layers: input layer, hidden layer with wavelets as activation functions of its neurons and linear output layer. Each wavelet node of the hidden layer is described by three parameters: the dilation of the wavelet function (*d*), the translation (*t*) and the linear weight (*w*). These parameters are adapted during the training phase. As shown in Figure 2, wavelet networks are feed-forward networks with one hidden layer. The hidden neuron activation functions are wavelet functions.

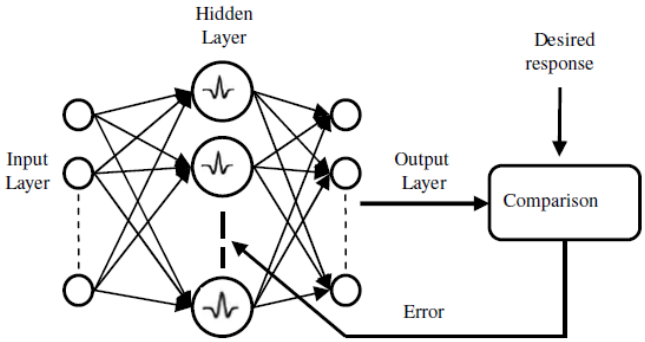

Fig. 2 Wavelet neural network structure.

The outputs of the wavelet network are computed using equation (1):

$$y(x) = \sum_{i=1}^{h} \omega_i \psi_i(X, d, T) = \sum_{i=1}^{h} \omega_i \psi(d_i(X - T_i)) \qquad (1)$$

Where:

- h : The number of hidden nodes
- ω_i : The weight parameter between the ith wavelet of the hidden layer and the linear output of the network
- d_i : Parameter of dilatation of the ith wavelet.
- T_i : Translation vector of the ith wavelet.
- X : Input vector of the network
- ψ : The wavelet function.

The wavelet function used in our study is the inverse Mexican-hat given in equation (2).

$$\psi(X) = (\|X\|^2 - p)e^{-\frac{\|X\|^2}{2}} \qquad (2)$$

Where:

$$\|X\|^2 = X^T X \qquad (3)$$

$\|X\|$ is the Euclidian norm of vector X .

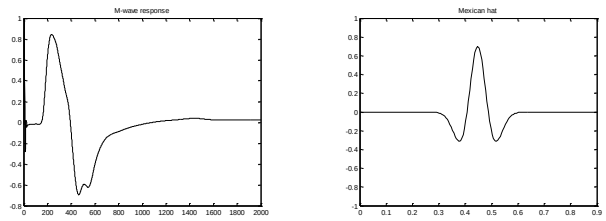

(a) **(b)**

Fig. 3 M-wave response (a); Mexican hat (b).

Fig.3(a) and Fig.3(b), show respectively the M-wave response signal and the Mexican hat signal. The wavelet neural network is initialized with a regular wavelet lattice and applies backpropagation algorithms.

Published By:
Blue Eyes Intelligence Engineering
and Sciences Publication (BEIESP)

The initialization of the wavelet is performed in two steps. The first step consists of constructing a library of discretely dilated and translated versions of a given wavelet. This library is constructed according to the available training data set, typically by selecting a subset from some regular lattice of dilated and translated versions of ψ . In the second step, the desired number of wavelets is selected from this library using the algorithm of stepwise selection by orthogonalisation, as described in [5]. For each M-wave response, the network parameters are adapted after 200 epochs of learning, to minimize the error between the original signal and the output of the wavelet neural network (Figure 2). The training of the wavelet neural network is based on a set of input/output pairs $\{x, Y\}$ where Y is the function to be approximated. Then, the network is trained by a Gauss-Newton procedure [5]. Figure 4(a) shows an M-wave response and Figure 4(b) shows the output of the wavelet networks which is considered as a model, very close to the original signal.

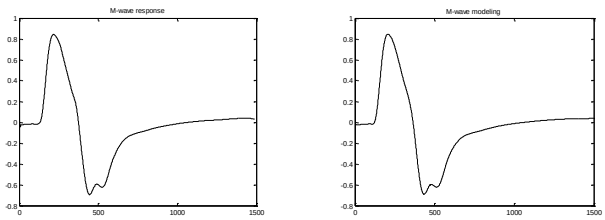

(a) **(b)**

Fig. 4 M-wave response (a); M-wave modeling (b).

After the extraction of the features corresponding to each M-wave response (i.e. translation, dilation and weight) from the different wavelets, these features are saved to be used during the classification. An artificial neural network is used to classify individuals. In our work, the Radial Basis Function neural network (RBF) was used.

C. Neural Network for classification

RBF emerged as a variant of artificial neural network in the late 80's. RBF network uses radial basis functions as activation functions. It has an input layer, a hidden layer with a non-linear RBF activation function and an output layer. In order to use a Radial Basis Function network, it is important to specify the hidden unit activation function, the number of processing units, a criterion for modeling a given task and a training algorithm to find the parameters of the network [6-7]. The network training consists of finding the RBF weights. A set of input-output pairs, called training set, is presented to the network to optimize its parameters in order to fit the outputs to the given inputs. The RBF scheme used in our work is given by (Figure 5).

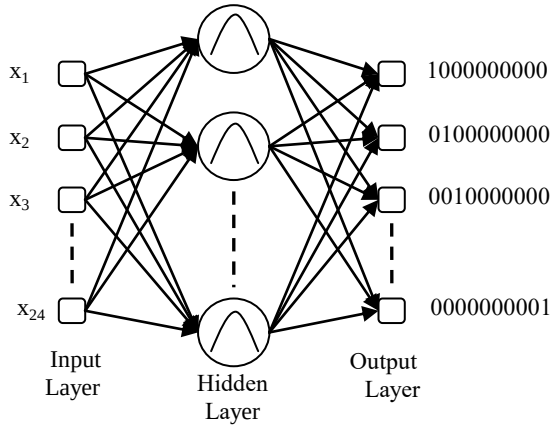

Fig. 5 An RBF Neural Network, presenting the input, hidden and output layers.

The output layer implements a weighted sum of hidden-unit outputs as shown in equation (4):

$$y_k(x) = \sum_{j=1}^{M} w_{jk} \varphi_j(x) \tag{4}$$

The activation function used for the neurons in the hidden layer is the Gaussian function. It is given by equation (5):

$$\sigma(\gamma) = \exp(-\gamma^2) \tag{5}$$

The output value of the ith hidden neuron is given by equation (6) :

$$\varphi_j = \sigma(\gamma_j) \tag{6}$$

Given the inputs x , the total input to the ith hidden neuron γ_j is given by equation (7):

$$\gamma_j = \sqrt{\sum_{i=1}^{n} \left(\frac{x_i - c_{ij}}{\lambda_{ij}} \right)^2}, \; j = 1,2,\ldots,M \tag{7}$$

Where:

- x : The input feature vector.
- w_{jk} : The weight of hidden neurons.
- M : The number of hidden neurons.
- φ_j : The output value of the ith hidden neuron.
- $\sigma(\gamma)$: The radial basis function.
- c_{ij} , λ_{ij} are centers and standard deviations of radial basis activation functions.

In this work, the neural network inputs correspond to a set of M-wave parameters (i.e., translation, dilation and weight) extracted from the Wavelet Networks, as described previously. The outputs of this neural network correspond to each specific individual. This network is trained for each class, and each class is learned for 500 epochs. Then this network is tested using other responses from the same individuals.

III. PROTOCOL

The measurements were done as follow:

Published By:
Blue Eyes Intelligence Engineering
and Sciences Publication (BEIESP)

Three electrodes were placed on the palm of the right hand as shown in Figure 6.

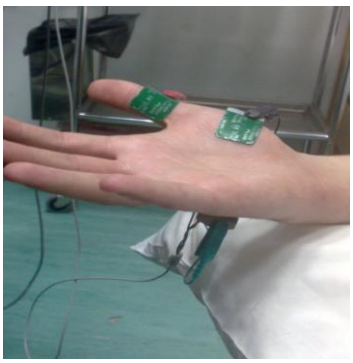

Fig. 6 Electrodes position for M-wave measurement.

An electrical stimulation of intensity 20 mA and 30 mA was carried out twenty times on the motor nerves of the hand (Figure 7).

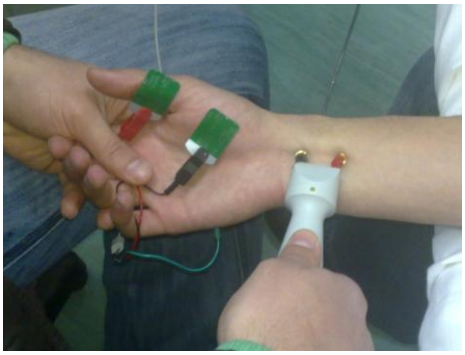

Fig. 7 Stimulation of motor nerves of the hand.

The response is recorded from the thenar. This response is the M-wave (Figure 8).

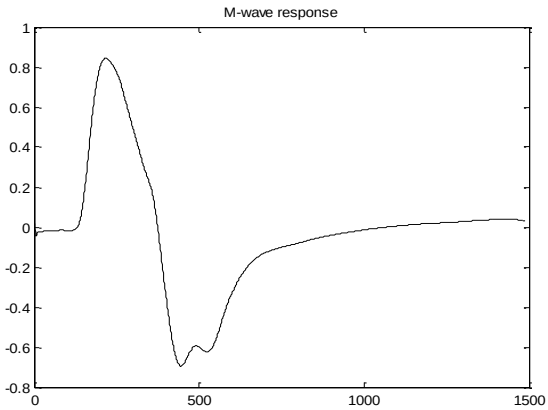

Fig. 8 M-wave response.

IV. RESULTS AND DISCUSSIONS

As shown previously, the EMG responses or M-waves were recorded from ten healthy individuals (8 men and 2 women) in response to a stimulation of intensity 20 mA and 30 mA. Each signal was sampled at 1 Hz. For each individual, 15 responses were used for the purpose of training modeled by 8 wavelets. Table 1 shows the classification performances corresponding to each individual in case of stimulation of intensity 20 mA. The performance is analyzed by modifying the number of responses to identify individuals (5, 10 and 15 responses) each time.

Number of responses	Individual 1	Individual 2	Individual 3	Individual 4	Individual 5
5	80%	100%	80%	80%	80%
10	90%	100%	90%	90%	90%
15	93%	100%	93%	93%	93%
Number of responses	Individual 6	Individual 7	Individual 8	Individual 9	Individual 10
5	80%	100%	100%	80%	80%
10	90%	100%	100%	90%	90%
15	93%	100%	100%	93%	93%

Table 1. Results of the Identification performance in case of stimulation of intensity 20 mA.

Table 1 shows that the highest identification performance is obtained when using 15 responses for the identification. The performance increased up to 100%. Table 2, corresponding to the case of stimulation of intensity 30 mA, shows also that the highest identification performance is 100% and is obtained when using 15 responses during the identification process. Consequently, the best performance is obtained when using 15 responses for the identification regardless of the intensity of the stimulation [12].

Number of responses	Individual 1	Individual 2	Individual 3	Individual 4	Individual 5
5	80%	100%	100%	80%	80%
10	90%	100%	100%	90%	90%
15	93%	100%	100%	93%	93%
Number of responses	Individual 6	Individual 7	Individual 8	Individual 9	Individual 10
5	80%	100%	100%	80%	80%
10	90%	100%	100%	90%	90%
15	93%	100%	100%	93%	93%

Table 2. Results of the Identification performance in case of stimulation of intensity 30 mA.

V. CONCLUSION

The measure of the electrical activity in nerves and muscles helps in the detection of the presence, location, and extent of nerve and muscle disorders. The use of these physiological signals has gone beyond the medical field to be used as a biometric tool. This paper presents a new method of biometric identification based on M-waves. These waves are obtained after an electrical stimulation of intensities 20 mA and 30 mA. It consists of modeling the M-waves (8 wavelets are used) then extracting the significant parameters to identify and classify individuals. RBF neural network is used for the classification. The parameters obtained from the different wavelets are indeed the inputs of the neural network. This method achieves promising results with an average performance of 95%. The proposed technique is simple and efficient and provides encouraging results. This study encourages further research in biometric identification using nerves responses.

Published By:
Blue Eyes Intelligence Engineering
and Sciences Publication (BEIESP)

REFERENCES

1. A.K. Jain, A. Ross, S. Prabhakar, "An introduction to biometrics recognition", *IEEE Transactions on Circuits and Systems for Video Technology*,Vol.14,No.1, 2004 , pp.4-20.
2. Q.H. Zhang, "Using Wavelet Network in Nonparametric Estimation," *IEEE Trans.Neural Networks*, Vol.8, 1997, pp.227-236.
3. Y. C. Pati, P.S. Krishnaprasad, "Analysis and synthesis of feed-forward neural networks using discrete affine wavelet transformations," *IEEE Trans.Neural Networks*, Vol.4, 1993, pp.73-85.
4. Q. Zhang, A. Benveniste, "Wavelet networks," *IEEE Trans. Neural Networks*,Vol.3 , 1992, pp.889-898.
5. J. Zhang, G.G. Walter, Y. Miao, W.N.W. Lee, "Wavelet Neural Networks for function learning" *IEEE Trans. Signal process*, Vol.43, No.6, 1995, pp.1485-1497.
6. S. Haykin, *Neural Networks: A comprehensive Foundation*, Macmillan College Publishing Company, 2nd edition, New York, 1998.
7. D.E. Rumelhard, G.E. Hinton, R.J. Williams, "Learning representations by back propagation errors", *In: Nature* (1986) , (pp.323:533-536).
8. L. Biel, O. Pettersson, L. Philipson, and P. Wide, 'ECG analysis: a new approach in human identification', *IEEE Transactions on Instrumentation and Measurement*, Vol. 50, No. 30, 2001 , pp.808–812.
9. K.N. Plataniotis, D. Hatzinakos, J. K. M. Lee, 'ECG biometric recognition without fiducial detection', *Proceedings of Biometrics Symposiums (BSYM '06)*, Baltimore, MD, USA, 2006.
10. Y. Wang, K.N. Plataniotis, D. Hatzinakos, 'Integrating analytic and appearance attributes for human identification from ECG signal', *Proceedings of Biometrics Symposiums (BSYM '06)*, Baltimore, MD, USA, 2006.
11. S. Chantaf, A. Naït-Ali, P. Karasinski, M. Khalil, 'ECG modelling using wavelet networks: application to biometrics', *Int. J. Biometrics*, Vol.2, No.3, 2010, pp.236-249.
12. S. CHANTAF, " Biométrie par signaux physiologiques" PhD Thesis. Université Paris Est Créteil (UPEC), Paris, France, 2011.
13. A.J. Robinson, L. Snyder-Mackler, "Clinical Electrophysiology: Electrotherapy and Testing Procedures", 2007, Third edition, chapter 12: Clinical electrophysiologic Examination and Evaluation, (page 424), Lippincott Williams and Wilkins, Baltimore, MD.

AUTHORS PROFILE

Dr. Samer Chantaf Profile Samer CHANTAF was born in Chebaa, in Sud Lebanon in 1983. He obtained an engineering degree in biomedical from Islamic university, faculty of engineering, khaldeh, Lebanon in 2006. He received the Master 2 research in signals and images in medicine from the University of Paris-EST Creteil in France in 2007. He received his Ph.D from the University of Paris-EST Creteil in France in 2011. His current interests are the signal and image processing problems: detection, classification, analysis, representation and modeling of non stationary signals, with application to biomedical signals and images He is currently researcher at Lebanese University. Number of publications: 2 articles in international Journals, 2 participations in conferences

Prof. Amine Nait-Ali Profile Amine NAIT-ALI was born in 1972. He received in 1994 the M.sc degree in Electrical Engineering "*Ingénieur d'état en électronique*," at the university USTO (Oran), then the DEA degree "Diplôme des Etudes Approfondies" in Signal Processing and Automatic from the University Paris XI (1995). In 1998, he received the Ph.D. degree in Biosignal processing and the "Habilitation à Diriger des Recherches" (HDR) from the University Paris XII, in 2007. He has been an Associate Professor and currently a Professor at the same university. His research interests are focused on biosignal processing, biometrics, optimization, modeling and medical signal and image compression. He has co-authored a number of international peer-reviewed papers and edited and co-edited five books in the biomedical and biometrics field (Springer, ISTE-Wiley and Hermes). He has organized and/or run several national, european and international workshops and served also as a reviewer for IEEE Transaction on Biomedical Engineering, EURASIP journal on advances in Signal Processing, Biomedical Signal Processing and Control et Digital Signal Processing. He is also a member of: IEEE, SFGBM, GDR ISIS and STIC-Santé. Finally, he manages currently the Medical Database for the Evaluation of Image and Signal Processing Algorithms (MeDEISA, available at www.medeisa.net). Number of publications: 50 articles in international Journals, 33 participations in conferences, 27 book chapters.

Dr. Mahmoud Abbas Profile Mahmoud ABBAS was born in Akkar Atika, in North Lebanon in 1963. He received the DEA from the University of Bordeaux 1, France. He received his Ph.D in Microwaves Instrumentation and Measurement from the University of Bordeaux 1, France. He is the head of Computer Communication and Networks Engineering Department, Lebanese University/ University Institute of Technology, saida. His current interests in electronics and microwaves work. Number of publications: 8 articles in international Journals.

Prof. Mohamad Khalil Profile Mohamad Khalil was born in Akkar Atika, in North Lebanon in 1973. He obtained an engineering degree in electrical and electricity from the Lebanese University, faculty of engineering, Tripoli, Lebanon in 1995. He received the DEA in biomedical engineering from the University of Technology of Compiegne (UTC) in France in 1996. He received his Ph.D from the University of Technology of Troyes in France in 1999. He received his HDR (Habilitation a diriger des recherches) from UTC in 2006. He is currently researcher at Lebanese University. He is director of the Azm center for research in biotechnology at the doctoral school of sciences and technology at the Lebanese university. He is the chair of the EMBS chapter in Lebanon. His current interests are the signal and image processing problems: detection, classification, analysis, representation and modeling of non stationary signals, with application to biomedical signals and images. Number of publications: 40 articles in international Journals, 100 participations in conferences

Published By:
Blue Eyes Intelligence Engineering
and Sciences Publication (BEIESP)