International Journal of Recent Technology and Engineering (IJRTE)
ISSN: 2277-3878, Volume-3, Issue-1, March 2014

Optimisation of Cool Tub to Prevent Brain Damage in Infant

C.Athira, M.Keerthana, K.Priyangaa, V.Radhika

Abstract- Neonatology is a branch of pediatrics that deals with the medical care of newborn infants. Neonatal Encephalopathy is a clinical and not an etiologic term that describes an abnormal non-behavioral state consisting of decreased level of consciousness and usually other signs of brain stem and/or motor dysfunction. Hypoxic Ischemic Encephalopathy is a disorder caused due to birth asphyxia. Asphyxia means lack of oxygen. Therapeutic hypothermia has been shown to decrease the risk of brain injury in newborn. Brain hypothermia, is induced by cooling a baby to around 35°C for three days after birth. Some of the cooling methods are antipyretics, fans, ice packs, cold fluids, water filled blankets or garments, forced cold air and cool caps. Cool tub is the most prevalent technology. It is a tub designed to cool the brain of neonates with oxygen deprivation during birth in order to prevent brain damage. The cool tub has cooling unit, in which cooling is provided by cool pack placed in it, infant should placed within four hours of birth. The baby was placed in the tub for 72 hours after which the baby's temperature is slowly raised again over the following four hours. The idea of the cool tub is to cool the brain soon after the injury to stop cell suicide in the brain. The aim of this work is to monitor the temperature of the baby and hence maintain the same by automatically cooling and re-warming the material inside the cap. This process is done using temperature transducer, microcontroller, cooling unit and a warming unit.

Keywords: birth asphyxia, hypothermia, neonatal encephalopathy, cool cap.

I. INTRODUCTION

1.1NEONANTOLOGY

Neonatology is a subspecialty of pediatrics that consists of the medical care of new born infants, especially the ill or premature newborn infant. It is a hospital-based specialty, and is usually practiced in neonatal intensive care units (NICU's). The principal patients of neonatologists are newborn infants who are ill or requiring special medical care due to prematurity, low birth weight, intrauterine growth retardation, congenital malformations (birth defects), sepsis, and pulmonary hyperlasia or birth asphyxias. Rather than focusing on a particular organ system, neonatologists focus on the care of newborns who require Intensive Care Unit (ICU) hospitalization. It is also called as neonatal medicine.

1.2 HIE AND HYPOTHERMIA

Asphyxia is a disorder which is caused by the lack of oxygen or excess of carbon dioxide in the body that results in unconsciousness and often death.

1.3HYPOXIC-ISCHEMIC ENCEPHALOPATHY

It is used to describe the resultant condition due to a deficit in oxygen supply to the brain.

a) **Hypoxemia** - a diminished amount of oxygen
b) **Ischemia** - a diminished amount of blood perfusing the brain
c) **Encephalopathy** - any dysfunction of the brain

The perinatal brain can be deprived of oxygen by two major pathogeneticmechanisms: hypoxemia and ischemia. Hypoxemia and ischemia can occur as a result of an event either before and/or during delivery. When HIE occurs, following the termination of the insult, a cascade of deleterious events result in cell death. HIE can result in a wide variety of disorders including:

a) Hearing loss and learning disability
b) Mild and severe motor dysfunction
c) Cerebral palsy
d) Death

There is a therapeutic window of opportunity during which hypothermic intervention can decrease the amount of cell death resulting from secondary energy failure. Science has demonstrated that selective head cooling can interrupt the second phase of the injury and have a significant effect on the severity of the secondary cell death. Further, animal studies have also shown that if selective head cooling is started sooner (i.e. less than 3 hours) results are even more significant.

Selective head cooling with the cool cap system utilizes a sealed water cap placed over the infant's head that is cooled to maintain a core rectal temperature of 34.5°C ± 0.5ºC over a 72 hour treatment period followed by a 4-hour passive re-warming period. The cool cap system generates a temperature gradient across the brain. As a result, the outer area of the brain, the cortex, is cooler than the deep brain structures. Research has shown that optimal neuro-protective temperatures for the cortex are colder than neuro-protective temperatures for the deep brain structures. During the selective head cooling

Revised Manuscript Received on 30 March 2014.
* Correspondence Author
C.Athira*, B.E. Department of Electronics and Instrumentation Engineering, Sri Ramakrishna Engineering College, Coimbatore (Tamil Nadu), India.
M.Keerthana, B.E. Department of Electronics, Sri Ramakrishna Engineering College, Coimbatore (Tamil Nadu), India.
K.Priyangaa, B.E. Department of Electronics and Instrumentation Engineering, Sri Ramakrishna Engineering College, Coimbatore (Tamil Nadu), India.
V.Radhika, Assistant Professor, Department of Electronics and Instrumentation Engineering Sri Ramakrishna Engineering College, Coimbatore (Tamil Nadu), India.

treatment with the cool-cap system, the infant experiences mild systemic hypothermia and thus are less likely to experience the side effects seen with whole body cooling.
Hypothermia in neonates is defined as a process of lowering the core temperature below 36.5°C.The duration of cooling necessary for neuro-protectionif started immediately after the insult in acute animal experiments is much shorter than 72 hours.

III. EXISTING METHODOLOGY

2.1 COOL CAP

Cool cap was designed to prevent or reduce damage to the brains of the patients by keeping the head cool while providing radiant warmth to the remainder of the body. The cool cap maintains water flow through the cap and the cap water at an operator-specified temperature. The device monitors and displays physiological temperatures; the operator uses the rectal temperature reading as a guide to adjust the cap water temperature. The goal is to adjust the cap water appropriately in order to maintain the infant's rectal temperature at 34.5^0C ± 0.5^0C.
The cool cap allows the operator to adjust the cap temperature within ± 1^0C. The operator is responsible for monitoring the infant's rectal temperature and adjusting the cap temperature to keep the rectal temperature within the target range. The device is designed to work with a radiant warmer to maintain the infant's core temperature, as indicated by the rectal temperature, within the target range of 34.5^0C ± 0.5^0C.The main problem with the cool cap is that the screen on the control module of the device can freeze. This means that despite information being shown on-screen that the caps are working; the infant may not be receiving cooling treatment. The instrument is too huge in size. Maintenance cost is high (i.e.) it uses drain, fill collectors for circulating water and hence servicing is required

III.WORKING DIAGRAM AND ITS RESCRIPTION

The block diagram which includes essential parts like
1. Cool-tub
2. Temperature transducer
3. Microcontroller
4. Temperature Indicator
5. Warming unit
6. ECG electrodes
7. LabVIEW

The block diagram (fig3.1) shows that,infant is placed in the clay pot .The clay pot is filled with layer of sand and urea-based cooling powder, upon which plastic lined basket is placed. Then the infant is placed over the basket.
The temperature of infant and clay pot is taken. First the temperature of the infant is compared with normal temperature, the PIC is programmed with required temperature specification. If the infant temperature is greater than the specified, relay get ON to spray the water into the clay pot to reduce the temperature. If the temperature becomes more less the specification, relay get OFF to bring back the normal temperature.
The temperature is indicated by using LED. Three indicators are used in it. The red indicated the high range temperature, green indicates the normal range, blue indicates the low temperature

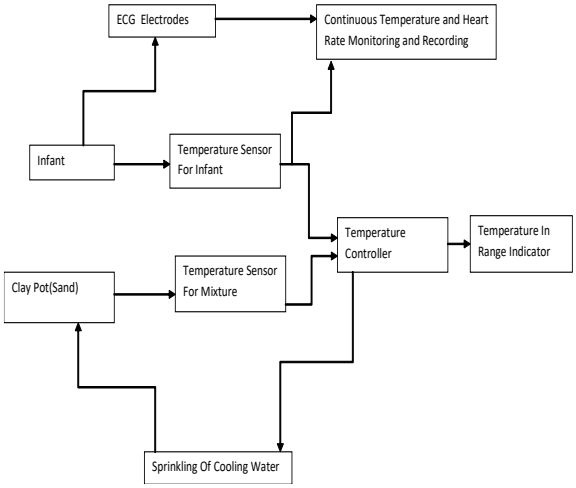

Fig 3.1 Working diagram of cooltub

Cooling material is a urea based powder used in the instant cold packs which use an endothermic reaction to cool down quickly. The cooling powder is non-toxic.

IV.HARDWARE AND SOFTWARE DESCRIPTION

A.Hardware

The various hardware components used to develop the proposed system for inducing hypothermia in neonates are given below and they are explained in detail as follows.
a. Power supply unit
b. Relay circuit
c. Microcontroller PIC16f887A
d. Display circuit
e. Indicators

4.a Power Supply Unit

12V source for relay and 5V for microcontroller and LM35.Power supply unit is incorporated in order to obtain noise free and constant voltage .It is built using a filter, rectifier, voltage regulator and transformer .A steady dc voltage is obtained by rectifying the ac voltage, then filtering to adc level, and finally, regulating to obtain a desired fixed dc voltage.

4.b Relay circuit

It consists of two main parts namely Driver circuit and Relay.The Driver circuit has LM235(temperature sensor) senses the temperature and gives it as an input signal to the microcontroller unit.The signals are sent through the driver IC..The driver output is given to the relay which controls the cooling and the warming unit

4.c Microcontroller PIC16f877A

The PIC16f877A is one of the latest products from Microchip. For its low price, wide range of application, high quality and easy availability, it is used in controlling temperature in this work. The limits of temperature ranges are programmed in this microcontroller and in the output port indicators and buzzer are connected.

4.d Display Unit

Published By:
Blue Eyes Intelligence Engineering
and Sciences Publication (BEIESP)

The set point temperature that is given to the microcontroller can be viewed through the display unit. Liquid crystal display (LCD) is used for this purpose. Temperature of the baby sensed using the temperature transducer can also be viewed through the display.

4.e Indicators

The indicators used in the project are

- LED
- Buzzer

LEDs are used to indicate the ongoing process (cooling or warming).A light-emitting diode (LED) is a semiconductor light source. LED is used to indicate the temperature in the range of, Low(hypothermia)-Orange, Normal-Green, High(hyperthermia)-Red. Buzzer is used to alert when high temperature of the baby is reached. Buzzer connected to the microcontroller pin gives an alarm, once the high temperature (42˚C) is crossed

B.Software

The software used in our project is LabVIEW. LabVIEW is used to indicate the operation that is currently going. LabVIEW is a graphical programming language and hence the user can easily be able to understand the operation. The simulation in LabVIEW was shown in figure 4.1 & 4.2.

The LabVIEW mainly has two parts

- Front panel
- Block diagram

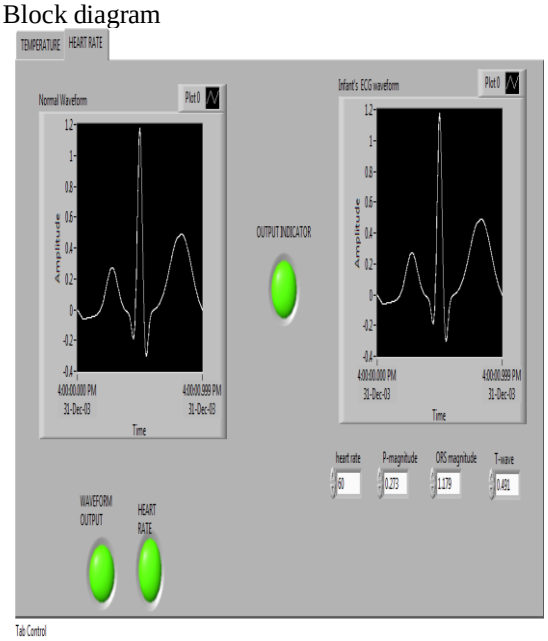

Fig 4.1 Front panel diagram of ECG simulation.

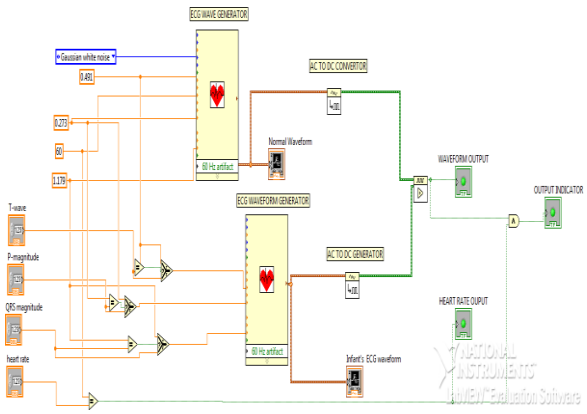

Fig4.2 Block diagram of ECG simulation

V. CONCLUSION AND FUTURE SCOPE

5.1 Conclusion

This proposed method mainly aims at maintaining the body temperature of the baby at a constant value around 34^{0}C thus inducing hypothermia and preventing the death of the brain cells. The material inside the tub is reusable and the tub is made out of a material which has electrical safety. By providing these facilities the project becomes fully automated and does not require any manual interventions. Manual interventions and the software problems in the existing cool tub are eliminated. Hence hypothermia is constantly provided for 72 hours followed by gradual re-warming of the neonate.

5.2 Future scope

The future enhancement of the project can be made by including advancements in the vital parameters. Hypothermia can include certain difficulties in the neonates such as increase in the body temperature of the infant. It can also cause reduction in the metabolism rate. To avoid side effects, the neonate's body conditions which include parameters like

- Blood pressure,
- Pulse rate should also be simultaneously monitored.

REFERENCES

1. Horst Michaud & Heinrich Rock(1992), 'Process for the production of odorless prilled urea-dicyandiamide fertilizers'.
2. Gunn AJ, Gluckman PD, Gunn TR(1998), 'Selective head cooling in newborn infants after perinatal asphyxia: a safety study', Vol.102, pp.885–892
3. MarianneThoresen and Andrew Whitelaw(2005), 'Therapeutic hypothermia for hypoxic–ischaemicencephalopathyin the newborn infant', Current opinion in neurology, pp.111-116.
4. Horn A.R, M.C. Harrison, and L.L. Linley(2010), 'Evaluating a Simple Method of Neuro-protective Hypothermia for Newborn Infants', Journal of tropical pediatrics, Vol.56, pp.172-177.
5. Kyla Marks, EilonShany, IlanShelef, Agneta Golan and Ehud Zmora)(2010),'Hypothermia: a neuro-protective therapy for neonatal Hypoxic ischemic encephalopathy', Vol.12, pp.494-500.
6. John Hopkins University, Maryland, USA, developed 'Cooling cure device' published in the journal 'Electronics for you' in the year of 2013.
7. http://en.wikipedia.org/wiki/Data acquisition.
8. http://en.wikipedia.org/wiki/Olympic Cool-Cap system.

Published By:
Blue Eyes Intelligence Engineering
and Sciences Publication (BEIESP)