International Journal of Recent Technology and Engineering (IJRTE)
ISSN: 2277-3878 (Online), Volume-2 Issue-4, September 2013

Effect of Injector Opening Pressure and Injection Timing on Exhaust Emissions and Combustion Characteristics of High Grade Low Heat Rejection Diesel Engine with Tobacco Seed Oil Based Biodiesel

N. Venkateswara Rao, M.V.S. Murali Krishna, P.V.K.Murthy

Abstract*—Experiments were conducted to determine exhaust emissions and combustion characteristics of a conventional diesel engine (CE) and high grade low heat rejection diesel engine (LHR) (with air gap insulated piston with superni (an alloy of nickel) crown, air gap insulated liner with superni insert and ceramic coated cylinder head)with different operating conditions [normal temperature and pre-heated temperature] of tobacco seed oil based biodiesel with varied injection timing and injector opening pressure. Exhaust emissions [smoke and oxides of nitrogen] and combustion characteristics [peak pressure, time of occurrence of peak pressure and maximum rate of pressure] were determined at peak load operation of the engine fuelled with tobacco seed oil based biodiesel with different versions of the engine. Comparative studies on exhaust emissions and combustion characteristics were made between different versions of the engine with biodiesel operation with varied engine parameters. Smoke levels decreased and NOx levels increased with LHR engine with biodiesel operation on LHR engine. Advanced injection timing and increase of injector opening pressure reduced exhaust emissions from LHR engine with biodiesel operation.

***Index Terms*—Alternate Fuels, Vegetable Oils, Biodiesel, LHR engine, Exhaust emissions, Combustion characteristics.**

I. INTRODUCTION

The world is presently confronted with the twin crises of fossil fuel depletion and environmental degradation. The fuels of bio origin can provide a feasible solution of this worldwide petroleum crisis (1-2). It has been found that the vegetable oils are promising substitute, because of their properties are similar to those of diesel fuel and they are renewable and can be easily produced. Rudolph Diesel, the inventor of the diesel engine that bears his name, experimented with fuels ranging from powdered coal to peanut oil. Several researchers [3-6] experimented the use of vegetable oils as fuel on diesel engine and reported that the performance was poor, citing the problems of high viscosity, low volatility and their polyunsaturated character.

Revised Manuscript Received on 30 September 2013.
* Correspondence Author
Prof. N.V.Rao, Mechanical Engineering Department, Osmania University, /Chaitanya Bharathi Institute of Technology, gandipet, Hyderabad, Ranga Reddy Dist, Andhra Pradesh, India.
Dr. M.V.S.Murali Krishna, Mechanical Engineering Department, Osmania University, /Chaitanya Bharathi Institute of Techchnology,gandipet, Hyderabad, Ranga Reddy Dist, Andhra Pradesh, India.
Dr. P.V.K.Murthy Mechanical Engineering Department, J.N.T. University, /Jaya Prakash Narayan Educational Society Group of Institutions, Mahabubnagar, Andhra Pradesh, India.

Experiments were conducted [7-10] on preheated vegetable oils [temperature at which viscosity of the vegetable oils were matched to that of diesel fuel] and it was reported that preheated vegetable oils improved the performance marginally and decreased pollution levels of smoke and NOx emissions. The problems of crude vegetable oils can be solved, if these oils are chemically modified to bio-diesel. Bio-diesels derived from vegetable oils present a very promising alternative to diesel fuel since biodiesels have numerous advantages compared to fossil fuels as they are renewable, biodegradable, provide energy security and foreign exchange savings besides addressing environmental concerns and socio-economic issues. Experiments were carried out [11-15] with bio-diesel on direct injection diesel engine and it was reported that performance was compatible with pure diesel operation on conventional engine. However biodiesel operation increased NOx levels. By controlling the injector opening pressure and the injection rate, the spray cone angle is found [16] to depend on injector opening pressure. Few investigators [17-20] reported that injector opening pressure has a significance effect on the performance and formation of pollutants inside the direct injection diesel engine combustion. Venkanna et al.[20] used honne/diesel blend in DI diesel engine with increased injector opening pressure and increased injection rate and reported improved performance and emissions.

The other important engine variable to improve the performance of the engine is injection timing. Performance improved or deteriorated depending on whether injection timing was advanced (injection timing away from TDC) or retarded (injection timing towards TDC). Recommended injection timing was defined by the manufacturer that it is the timing at which maximum thermal efficiency was obtained with minimum pollution levels from the engine.

Investigations were carried out [21-24] on single cylinder water cooled vertical diesel engine with brake power 3.68 kW at a speed of 1500 rpm with varied injection timing from 27-34°bTDC and it was reported that performance of the engine improved with advanced injection timing and increased NOx emissions and decreased smoke levels. Sound levels determine the phenomena of combustion in engine whether the performance was improving or deteriorating. Studies were made [22-24] on sound levels with convention engine with vegetable oils and it was reported from the studies, that performance deteriorated with vegetable oil operation on conventional engine leading to produce high sound levels.

Published By:
Blue Eyes Intelligence Engineering and Sciences Publication (BEIESP)

The drawbacks associated with biodiesel for use in diesel engine call for low heat rejection (LHR) diesel engine.

The concept of LHR engine is to reduce heat loss to coolant by providing thermal insulation in the path of heat flow to the coolant. LHR engines are classified depending on degree of insulation such as low grade, medium grade and high grade insulated engines. Several methods adopted for achieving low grade LHR engines are using ceramic coatings on piston, liner and cylinder head, while medium grade LHR engines provide an air gap in the piston and other components with low-thermal conductivity materials like superni, cast iron and mild steel etc. High grade LHR engine is the combination of low grade and medium grade engines. LHR engines with ceramic coating of thickness in the range of 500 microns on the engine components with pure diesel operation [25-27] provided adequate insulation and improved brake specific fuel consumption (BSFC) in the range of 5-7%. The investigations on low grade LHR engine consisting of ceramic coating on cylinder head were extended [28-30] to crude vegetable oil also and reported that ceramic coated LHR engines marginally improved brake thermal efficiency. However, the degree of insulation was not sufficient to burn high viscous vegetable oils.

Creating an air gap in the piston involved the complications of joining two different metals in medium grade LHR engines. Though it was observed [31] effective insulation provided by an air gap, the bolted design employed by them could not provide complete sealing of air in the air gap. It was made a successful attempt [32] of screwing the crown, made of low thermal conductivity material, nimonic (an alloy of nickel) to the body of the piston, by keeping a gasket, made of nimonic, in between these two parts. However, low degree of insulation provided by these researchers [32] was not able to burn high viscous fuels of vegetable oils. Studies were made [33-35] on a medium grade LHR diesel engine with air gap insulated piston with superni (an alloy of nickel whose thermal conductivity is $\frac{1}{16}$ of that of aluminium alloy) crown and air gap insulated liner with superni insert with vegetable oils and reported that performance deteriorated with CE and improved with LHR engine, when compared with pure diesel operation on CE.

Experiments were conducted [22-24] on high grade LHR engine which contained air gap insulated piston with superni crown with threaded design, air gap insulated liner with superni insert with threaded design and ceramic coated cylinder head with vegetable oils and reported that performance was deteriorated with vegetable oils in CE and improved with LHR engine.

Comparative performance on different versions of the LHR engines was also made [36-38] with vegetable oil operation with varied injection pressure and reported that performance of the engine improved with degree of insulation and increase of injector opening pressure.

Little literature was available on comparative studies of conventional diesel engine and LHR engine with different operating conditions of the biodiesel. Hence it was attempted here to evaluate the performance of the engine with tobacco seed oil based biodiesel with different versions of the engine with varied injector opening pressure and injection timing. The data of standard diesel fuel was taken from the reference [43].

II. MATERIALS AND METHODS

LHR diesel engine (Figure.1) contained a two-part piston; the top crown made of low thermal conductivity material, superni-90 screwed to aluminum body of the piston, providing a 3-mm air gap in between the crown and the body of the piston. The optimum thickness of air gap in the air gap piston was found to be 3-mm [32], for improved performance of the engine with diesel as fuel. The height of the piston was maintained such that compression ratio was not altered. Partially stabilized zirconium of thickness 500 microns was applied on inner side of cylinder head by plasma technique. A superni-90 insert was screwed to the top portion of the liner in such a manner that an air gap of 3-mm was maintained between the insert and the liner body. At 500°C the thermal conductivity of superni-90 and air are 20.92 and 0.057 W/m-K respectively

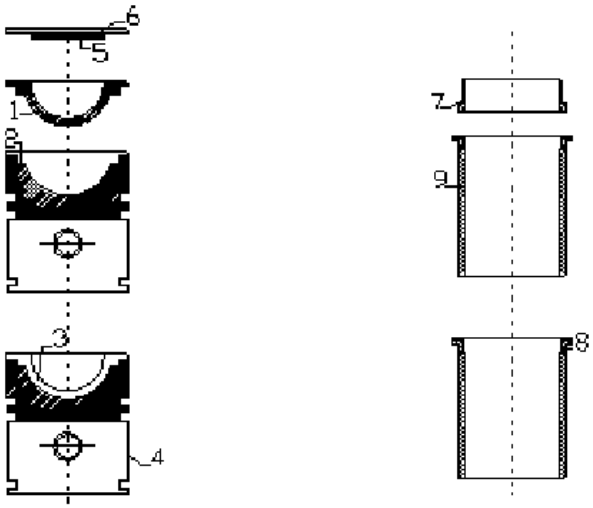

1. Crown, 2.Gasket, 3.Air Gap, 4.Body, 5.Ceramic Coating, 6. Cylinder Head, 7. Insert 8.Air Gap, 9. Liner

Insulated piston Insulated liner Ceramic coated cylinder head

Fig .1 Assembly details of air gap piston liner, air gap insulated liner and ceramic coated cylinder head

The chemical conversion of esterification reduced viscosity four fold. Tobacco seed oil contains up to 72.9 % (wt.) free fatty acids [39].The methyl ester was produced by chemically reacting the tobacco seed oil with an alcohol (methyl), in the presence of a catalyst (KOH). A two-stage process was used for the esterification [40-42] of the waste fried vegetable oil. The first stage (acid-catalyzed) of the process is to reduce the free fatty acids (FFA) content in tobacco seed oil by esterification with methanol (99% pure) and acid catalyst (sulfuric acid-98% pure) in one hour time of reaction at 55°C. In the second stage (alkali-catalyzed), the triglyceride portion of the tobacco seed oil reacts with methanol and base catalyst (sodium hydroxide-99% pure), in one hour time of reaction at 65°C, to form methyl ester and glycerol. To remove un-reacted methoxide present in raw methyl ester, it is purified by the process of water washing with air-bubbling. The methyl ester (or biodiesel) produced from tobacco seed oil was known as tobacco seed oil biodiesel (TSOBD). The physic-chemical properties of the crude tobacco seed oil and biodiesel in comparison to ASTM biodiesel standards are presented in Table 1

Published By:
Blue Eyes Intelligence Engineering
and Sciences Publication (BEIESP)

TABLE I
PROPERTIES OF TEST FUELS

Property	*Units*	*Diesel*	*Biodiesel*	*ASTM D 6751-02*
Carbon chain	--	C_8-C_{28}	C_{16}-C_{24}	C_{12}-C_{22}
Cetane Number		*55*	*55*	*48-70*
Density	*gm/cc*	*0.84*	*0.87*	*0.87-0.89*
Bulk modulus @ 20Mpa	*Mpa*	*1475*	*1850*	*NA*
Kinematic viscosity @ 40°C	*cSt*	*2.25*	*4.2*	*1.9-6.0*
Sulfur	*%*	*0.25*	*0.0*	*0.05*
Oxygen	*%*	*0.3*	*11*	*11*
Air fuel ratio (stochiometric)	--	*14.86*	*13.8*	*13.8*
Lower calorific value	*kJ/kg*	*42 000*	*37500*	*37 518*
Flash point (Open cup)	*°C*	*66*	*174*	*130*
Molecular weight	--	*226*	*261*	*292*
Preheated temperature	*°C*	--	*60*	--
Colour	--	*Light yellow*	*Yellowish orange*	---

The test fuels used in the experimentation were pure diesel, tobacco seed oil based biodiesel and crude tobacco seed oil. The schematic diagram of the experimental setup with test fuels is shown in Figure 2. The specifications of the experimental engine are shown in Table-2. The combustion chamber consisted of a direct injection type with no special arrangement for swirling motion of air. The engine was connected to an electric dynamometer for measuring its brake power. Burette method was used for finding fuel consumption of the engine. Air-consumption of the engine was measured by an air-box method (Air box was provided with an orifice meter and U-tube water manometer). The naturally aspirated engine was provided with water-cooling system in which inlet temperature of water was maintained at 80°C by adjusting the water flow rate. Engine oil was provided with a pressure feed system. No temperature control was incorporated, for measuring the lube oil temperature. Copper shims of suitable size were provided in between the pump body and the engine frame, to vary the injection timing and its effect on the performance of the engine was studied, along with the change of injector opening pressure from 190 bar to 270 bar (in steps of 40 bar) using nozzle testing device. The maximum injector opening pressure was restricted to 270 bar due to practical difficulties involved. Exhaust gas temperature was measured with thermocouples made of iron and iron-constantan.

TABLE II
SPECIFICATIONS OF THE TEST ENGINE

Description	**Specification**
Engine make and model	Kirloskar (India) AV1
Maximum power output at a speed of 1500 rpm	3.68 kW
Number of cylinders ×cylinder position× stroke	One × Vertical position × four-stroke
Bore × stroke	80 mm × 110 mm
Method of cooling	Water cooled
Rated speed (constant)	1500 rpm
Fuel injection system	In-line and direct injection
Compression ratio	16:1
BMEP @ 1500 rpm	5.31 bar
Manufacturer's recommended injection timing and pressure	27°bTDC × 190 bar
Dynamometer	Electrical dynamometer
Number of holes of injector and size	Three × 0.25 mm
Type of combustion chamber	Direct injection type
Fuel injection nozzle	Make: MICO-BOSCH No- 0431-202-120/HB
Fuel injection pump	Make: BOSCH: NO- 8085587/1

Published By:
Blue Eyes Intelligence Engineering
and Sciences Publication (BEIESP)

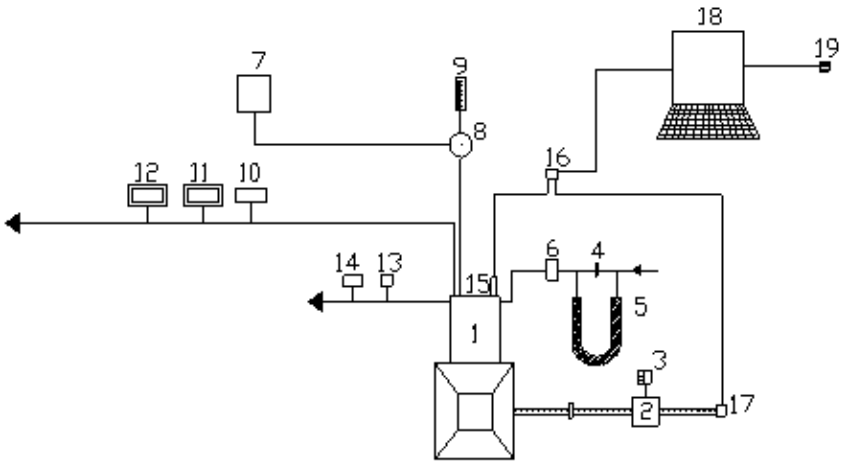

1.Engine, 2.Electical Dynamo meter, 3.Load Box, 4.Orifice meter, 5.U-tube water manometer, 6.Air box, 7.Fuel tank, 8, Pre-heater, 9.Burette, 10. Exhaust gas temperature indicator, 11.AVL Smoke meter, 12.Netel Chromatograph NOx Analyzer, 13.Outlet jacket water temperature indicator, 14. Outlet-jacket water flow meter, 15.Piezo-electric pressure transducer, 16.Console, 17.TDC encoder, 18.Pentium Personal Computer and 19. Printer.

Fig.2. Experimental Set-up

Exhaust emissions of smoke and NO_x were recorded by AVL (A company trade name) smoke meter and Netel Chromatograph (A company trade name) NOx analyzer respectively at peak load operation of the engine. Sound intensity was measured with sound analyzer at peak load operation of the engine. The specifications of the analyzers were given in Table 3.

TABLE III
SPECIFICATIONS OF ANALYZERS

Name of the analyzer	Measuring Range	Precision	Resolution
AVL Smoke meter	0-100 HSU	1 HSU	1 HSU
Netel Chromatograph NOx analyzer	0-2000 ppm	2 ppm	1 ppm
Sound Analyzer	0-150 Decibels	1 decibel	1 decibel

Piezo electric transducer, fitted on the cylinder head to measure pressure in the combustion chamber was connected to a console, which in turn was connected to Pentium personal computer. TDC (top dead centre) encoder provided at the extended shaft of the dynamometer was connected to the console to measure the crank angle of the engine. A special P-θ software package evaluated the combustion characteristics such as peak pressure (PP), time of occurrence of peak pressure (TOPP) and maximum rate of pressure rise (MRPR) from the signals of pressure and crank angle at the peak load operation of the engine. Pressure-crank angle diagram was obtained on the screen of the personal computer.

Different operating conditions of the biodiesel and crude tobacco seed oil were normal temperature and preheated temperature. Different injector opening pressures attempted in this experimentation were 190 bar, 230 bar and 270 bar. Various injection timings attempted in the investigations were 27-34ºbTDC.

III. RESULTS AND DICUSSION

A. Performance Parameters

Results and discussion were made in three parts such as 1. Evaluating performance parameters,
2. Determining exhaust emissions and 3. determining the combustion characteristics.
The performance of diesel fuel in conventional engine and LHR engine was taken from Reference [43]. The optimum injection timing with conventional engine was 31ºbTDC, while with LHR engine it was 28ºbTDC.

Curves from Figure 3 indicate that at recommended injection timing, engine with biodiesel showed the compatible performance for entire load range when compared with the pure diesel operation. This may be due to the difference of viscosity between the diesel and biodiesel and calorific value of the fuel. The reason might be due to (1) higher initial boiling point and different distillation characteristics, (2) higher and (2) higher density and viscosity leads to narrower spray cone angle and higher spray penetration tip, leading to inferior combustion compared to neat diesel [40]. However, higher density of biodiesel compensates the lower value of the heat of combustion of the biodiesel thus giving compatible performance with engine. Biodiesel contains oxygen molecule in its molecular composition. Theoretical air requirement of biodiesel was low and hence lower levels of oxygen were required for its combustion. Brake thermal efficiency increased with the advanced injection timing with conventional engine with the biodiesel at all loads. This was due to initiation of combustion at earlier period and efficient combustion with increase of air entrainment in fuel spray giving higher brake thermal efficiency.

Published By:
Blue Eyes Intelligence Engineering
and Sciences Publication (BEIESP)

Brake thermal efficiency increased at all loads when the injection timing was advanced to 31ºbTDC with the engine at the normal temperature of biodiesel. The increase of brake thermal efficiency at optimum injection timing over the recommended injection timing with biodiesel with conventional engine could be attributed to its longer ignition delay and combustion duration [43].

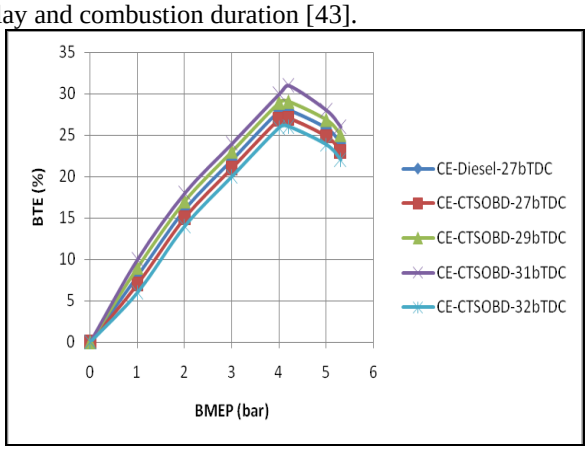

Fig.3. Variation of brake thermal efficiency (BTE) with brake mean effective pressure (BMEP) in conventional engine (CE) at different injection timings with biodiesel (TSOBD) operation.

Similar trends were noticed with preheated biodiesel. Preheating of the biodiesel reduced the viscosity, which improved the spray characteristics of the oil, causing efficient combustion thus improving brake thermal efficiency.

From Figure 4, it is observed that LHR version of the engine at recommended injection timing showed the improved performance at all loads compared with CE with pure diesel operation. High cylinder temperatures helped in improved evaporation and faster combustion of the fuel injected into the combustion chamber. Reduction of ignition delay of the vegetable oil in the hot environment of the LHR engine improved heat release rates and efficient energy utilization. The optimum injection timing was found to be 28ºbTDC with LHR engine with different operating conditions of biodiesel operation. Since the hot combustion chamber of LHR engine reduced ignition delay and combustion duration and hence the optimum injection timing was obtained earlier with LHR engine when compared to conventional engine with the biodiesel operation.

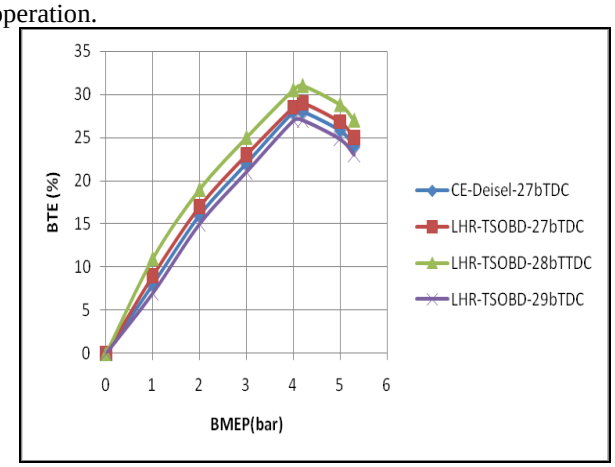

Fig.4. Variation of brake thermal efficiency (BTE) with brake mean effective pressure (BMEP) in LHR engine at different injection timings with biodiesel (TSOBD) operation.

The effect of varied injection timing on exhaust emissions and combustion characteristics was discussed with the help of bar charts while the effect of injector opening pressure and preheating was discussed with the help of Tables.

B. Exhaust Emissions

Figure 5 denotes that smoke levels were higher (25% and 13%) with LHR engine with pure diesel operation at recommended and optimized injection timings respectively in comparison with conventional engine. This was due to fuel cracking at higher temperature, leading to increase in smoke density. Higher temperature of LHR engine produced increased rates of both soot formation and burn up. The reduction in volumetric efficiency and air-fuel ratio was responsible factors for increasing smoke levels in the LHR engine near the peak load operation of the engine. As expected, smoke increased in the LHR engine because of higher temperatures and improper utilization of the fuel consequent upon predominant diffusion combustion [43]. When injection timing was advanced to their respective optimum values with both versions of the engine, smoke levels decreased with diesel operation. This was due to increase of air fuel ratios, causing effective combustion in both versions of the engine. The reason for reduction of smoke levels in the LHR engine was reduction of gas temperatures, with the availability of more of oxygen when the injection timing was advanced to its optimum value. This was confirmed by the observation of improved air fuel ratios [43] with the increase of injector opening pressure and with the advancing of the injection timing with both versions of the engine. However at optimum injection timings, smoke levels were lower in the conventional engine compared to the LHR engine, due to better air fuel ratios [43] and volumetric efficiency in the conventional engine.

Smoke levels were lower (18% and 11%) with LHR engine with biodiesel operation at recommended and optimized injection timings respectively in comparison with conventional engine. LHR engine marginally reduced smoke levels due to efficient combustion and less amount of fuel accumulation on the hot combustion chamber walls of the LHR engine at different operating conditions of the biodiesel compared to the conventional engine

Conventional engine with pure diesel operation gave lower smoke levels in comparison with biodiesel.

This was due to the higher value of ratio of C/H (C= Number of carbon atoms and H= Number of hydrogen atoms in fuel composition (higher the value of this ratio means, number of carbon atoms are higher leading to produce more carbon dioxide and more carbon monoxide and hence higher smoke levels) of fuel composition. The increase of smoke levels was also due to decrease of air-fuel ratios [43] and volumetric efficiency [43] with biodiesel compared with pure diesel operation. Smoke levels were related to the density of the fuel. Since biodiesel has higher density compared to diesel fuel, smoke levels were higher with biodiesel. Smoke levels decreased [43] at the respective optimum injection timing with test fuels. This was due to initiation of combustion at early period. This was due to increase of air entrainment, at the advanced injection timings, causing lower smoke levels.

Published By:
Blue Eyes Intelligence Engineering
and Sciences Publication (BEIESP)

Smoke levels were found to be lower with biodiesel operation compared with diesel operation with LHR engine. The inherent oxygen of biodiesel might have provided some useful interactions between air and fuel, particularly in the fuel-rich region. Certainly, it is evident proof of the oxygen content of biodiesels enhanced the oxidation of hydrocarbon reactions thus reducing smoke levels.

The data from Table 4 shows a decrease in smoke levels with increase of injector opening pressure, with different operating conditions of the biodiesel.

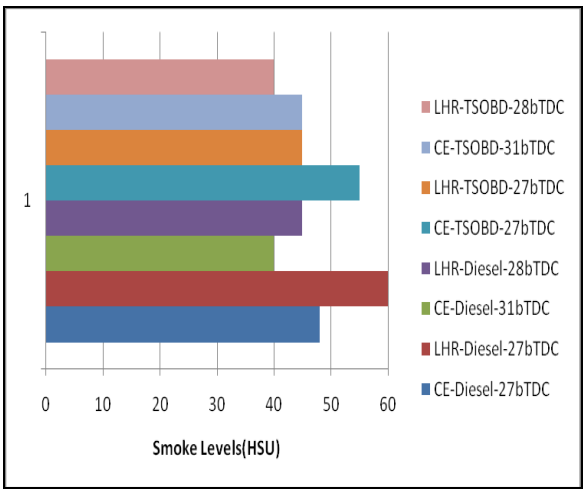

Fig.5.Bar charts showing the variation of smoke levels in Hartridge smoke unit (HSU) at peak load operation with test fuels at recommended and optimized injection timings at an injector opening pressure of 190 bar.

This was due to improvement in the fuel spray characteristics at higher injector opening pressure causing lower smoke levels. Even though viscosity of biodiesel was higher than diesel, high injector opening pressure improves spray characteristics, hence leading to a shorter physical delay period. The improved spray also leads to better mixing of fuel and air resulting in turn in fast combustion. This will enhance the performance [43]

Preheating of the biodiesel reduced smoke levels, when compared with normal temperature of the biodiesel. This was due to i) the reduction of density of the biodiesel, as density was directly related to smoke levels, ii) the reduction of the diffusion combustion proportion with the preheated biodiesel, iii) the reduction of the viscosity of the biodiesel with which the fuel spray does not impinge on the combustion chamber walls of lower temperatures rather than it directed into the combustion chamber**.**

NOx are the precursor pollutants which can combine to form photochemical smog. These irritate the eyes and throat, reduces the ability of blood to carry oxygen to the brain and can cause headaches, and pass deep into the lungs causing respiratory problems for the human beings. Long-term exposure has been linked with leukemia. Therefore, the major challenge for the existing and future diesel engines is meeting the very tough emission targets at affordable cost, while improving fuel economy.

Temperature and availability of oxygen are two favorable conditions to form NOx levels. At peak load, NOx levels increased with test fuels at recommended injection timing due to higher peak pressures, temperatures as larger regions of gas burned at close-to-stoichiometric ratios.

Figure 6 denotes that NOx levels were higher (41% and 5%) with LHR engine with pure diesel operation at recommended and optimized injection timings respectively in comparison with conventional engine. At peak load operation, due to the reduction of air fuel ratio with LHR engine, which was approaching to the stoichiometric ratio, causing more NOx concentrations as combustion chamber was maintained more hot due to the insulating parts.

NOx levels were lower (44% and 4%) with LHR engine with biodiesel operation at recommended and optimized injection timings respectively in comparison with conventional engine. Increase of combustion temperatures [43] with the faster combustion and improved heat release rates [43] in the LHR engine cause higher NOx levels in comparison with conventional engine with biodiesel operation.

From the Table.4, it was observed that Increasing the injection advance resulted in higher combustion temperatures and increase of resident time leading to produce more NOx concentration in the exhaust of conventional engine with test fuels.

At the optimum injection timing, the LHR engine with test fuels produced lower NOx emissions, at peak load operation compared to the same version of the engine at the recommended injection timing. This was due to decrease of combustion temperatures [43] with improved air fuel ratios.

TABLE.IV DATA OF EXHAUST EMISSIONS AT PEAK LOAD OPERATION

Injection Timing (° bTDC)	Test Fuel	Smoke Levels (Hartridge Smoke Unit)						NOx Levels(ppm)					
		Injector Opening Pressure (Bar)						Injector Opening Pressure (Bar)					
		190		230		270		190		230		270	
		NT	PT	NT	PT	NT	PT	NT	PT	NT	PT	NT	PT
27(CE)	DF	48	--	38	--	34	--	850	----	900	----	950	---
	TSOBD	55	50	50	45	45	40	900	825	950	875	1000	925
27(LHR)	DF	60	--	55	--	50	--	1200	--	1150	--	1100	--
27(LHR)	TSOBD	45	40	40	35	35	30	1300	1250	1250	1200	1200	1150
28(LHR)	TSOBD	40	35	35	30	30	25	1250	1200	1200	1150	1150	1100

Published By:
Blue Eyes Intelligence Engineering
and Sciences Publication (BEIESP)

28(LHR)	DF	45	--	40	--	35	--	1150	--	1100	--	1050	--
31(CE)	DF	30	--	30	--	35	--	1100	--	1150	--	1200	--
	TSOBD	45	40	40	35	35	30	1200	1100	1250	1150	1300	1250

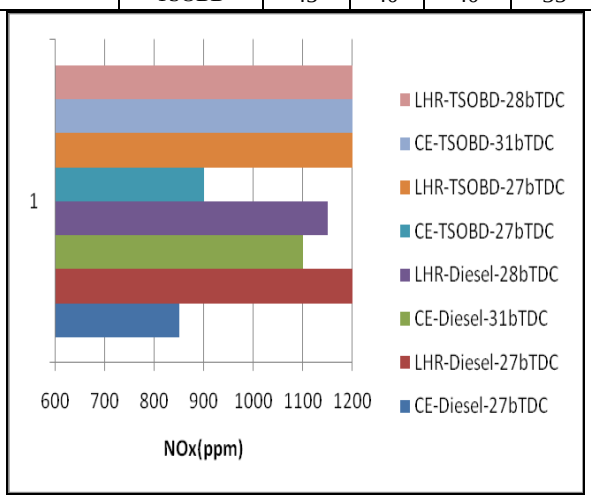

Fig.6.. Bar charts showing the variation of NOx levels at peak load operation with test fuels at recommended and optimized injection timings at an injector opening pressure of 190 bar.

Biodiesel with both versions of the engine gave higher NOx levels than pure diesel operation. The tobacco seed oil based biodiesel having long carbon chain (C_{20}-C_{32}) [39] recorded more NOx than that of fossil diesel having both medium (C_8-C_{14}) as well as long chain (C_{16}-C_{28}). The increase in NOx emission might be an inherent characteristic of biodiesel due to the presence of 54.9% of mono-unsaturated fatty acids(MUFA) and 18% of poly-unsaturated fatty acids (PUFA). That means, the long chain unsaturated fatty acids (MUFA and FUPA) such as oleic C18:1 and linoliec C18:2 fatty acids are mainly responsible for higher levels of NOx emission [39]. Another reason for higher NOx levels is the oxygen (10%) present in the methyl ester. The presence of oxygen in normal biodiesel leads to improvement in oxidation of the nitrogen available during combustion. This will raise the combustion bulk temperature responsible for thermal NOx formation Many researchers reported that oxygen [44] and nitrogen [45] content of biodiesel can cause an increase in NO*x* emissions. The production of higher NOx with biodiesel fueling is also attributable to an inadvertent advance of fuel injection timing due to higher bulk modulus of compressibility, with the in-line fuel injection system.

From the Table 4, it is noted that these levels increased with increase of injector opening pressure with different operating conditions of biodiesel as it is noticed from the Table.9. NO*x* slightly increased with test fuels as injector opening pressure increased. As seen from the Table.4, that peak brake thermal efficiency increased as injector opening pressure increased. The increase in peak brake thermal efficiency was proportional to increase in injector opening pressure. Normally, improved combustion causes higher peak brake thermal efficiency due to higher combustion chamber pressure [43] and temperature and leads to higher NO*x* formation. This is an evident proof of enhanced spray characteristics, thus improving fuel air mixture preparation and evaporation process.

NOx levels decreased with preheating of the biodiesel as noticed from the Table.4. The fuel spray properties may be altered due to differences in viscosity and surface tension. The spray properties affected may include droplet size, droplet momentum, degree of mixing, penetration, and evaporation. The change in any of these properties may lead to different relative duration of premixed and diffusive combustion regimes. Since the two burning processes (premixed and diffused) have different emission formation characteristics, the change in spray properties due to preheating of the vegetable oil (s) are lead to reduction in NOx formation. As fuel temperature increased, there was an improvement in the ignition quality, which will cause shortening of ignition delay. A short ignition delay period lowers the peak combustion temperature which suppresses NOx formation [46-47]. Lower levels of NOx is also attributed to retarded injection, improved evaporation, and well mixing of preheated biodiesel due to their viscosity at preheated temperatures. Biodiesel has higher value of NOx emissions followed by diesel. This was because of inherent nature of biodiesel as it has oxygen molecule in its composition.

C. Combustion Characteristics

Figure.7 indicates that LHR engine gave lower peak pressures (4%) at recommended injection timing and higher peak pressures (7%) with pure diesel operation in comparison with conventional engine. From the Table.5, it is noticed that peak pressures at an injection timing of 27° bTDC were lower in the LHR engine in comparison with the conventional engine with pure diesel operation. This was because the LHR engine exhibited higher temperatures of combustion chamber walls leading to continuation of combustion, giving peak pressures away from TDC. However, this phenomenon was nullified with advanced injection timing of 29°bTDC on the same LHR engine with diesel operation because of reduced temperature of combustion chamber walls thus bringing the peak pressures closure to TDC. Similar findings were obtained by Reference [32]. Peak pressures were higher (3% and 5%) with LHR engine with biodiesel operation at recommended and optimized injection timings respectively in comparison with conventional engine.

Published By:
Blue Eyes Intelligence Engineering
and Sciences Publication (BEIESP)

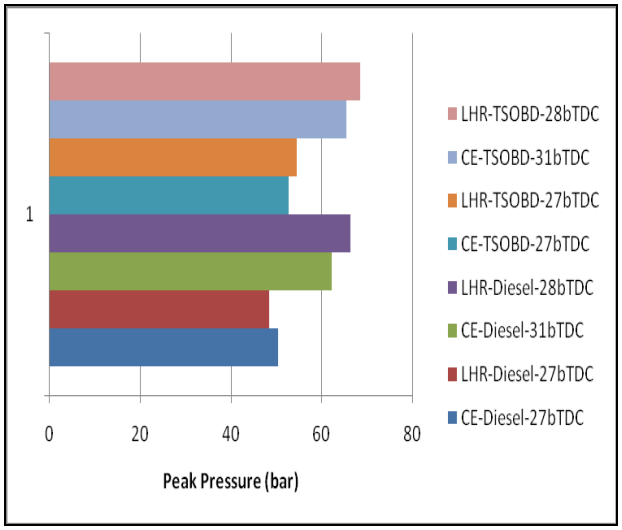

Fig.7. Bar charts showing the variation of peak pressure at peak load operation with test fuels at recommended and optimized injection timings at an injector opening pressure of 190 bar.

Peak pressure with LHR engine increased the mass-burning rate of the fuel in the hot environment leading to produce higher peak pressures. The advantage of using LHR engine for biodiesel was obvious as it could burn high viscous fuels.

From the Table.5, it is noticed that peak pressure for normal biodiesel was slightly higher than that of diesel fuel; even though biodiesel was having lower value of lower calorific value. Biodiesel advanced the peak pressure position as compared to fossil diesel because of its higher bulk modulus and cetane number. This shift is mainly due to advancement of injection due to higher density and earlier combustion due to shorter ignition delay caused by higher cetane number of biodiesel. When, a high density (or high bulk modulus) fuel is injected, the pressure wave travels faster from pump end to nozzle end, through a high pressure in-line tube [48]. This causes early lift of needle in the nozzle, causing advanced injection. Hence, the combustion takes place very close to TDC (lower value of time of occurrence of peak pressure) and the peak pressure slightly high due to existence of smaller cylinder volume near TDC.

Peak pressures increased with the increase of injector opening pressure and with the advancing of the injection timing with the test fuels. Peak pressure increased as injector opening increased. This may be due to smaller sauter mean diameter [47-48] shorter breakup length, better dispersion, and better spray and atomization characteristics. This improves combustion rate in the premixed combustion phase.

However, the peak pressures of preheated biodiesel were less than that of normal biodiesel. When the engine is running on preheated biodiesel the fuel injection was slightly delayed, due to decrease in bulk modulus of biodiesel with the increase in fuel temperature. The reasons for lower peak pressures of preheated biodiesel was also attributed to earlier combustion caused by short ignition delay (due to faster evaporation of the fuel) at their preheated temperatures.

Figure.8 denotes that maximum rate of pressure rise (MRPR) was highest for normal diesel followed by the biodiesel. With biodiesel, as injector opening pressure increased, spray characteristic improved and in turn burned fuel increased again and in turn combustion rate increased in the premixed combustion phase [28]. When the engine is operated under the full load condition, the mechanical loading is at the maximum level. The differences [47] in maximum rate of pressure rise, the peak cylinder pressure, and the occurrence of peak cylinder pressure during the maximum mechanical loading may cause performance loses. In the present work both peak cylinder pressure and maximum rate of pressure rise of biodiesel (190-270 bar) was lower and occurrence of peak cylinder pressure slightly deviated away when compared to normal diesel [47]. Hence, BSEC at peak load operation (Table.5) of biodiesel (190-270 bar) was higher compared to normal diesel. However it decreased as injector opening pressure of biodiesel increased. Preheated biodiesel gave lower MRPR when compared with normal biodiesel as in the case of peak pressure. .

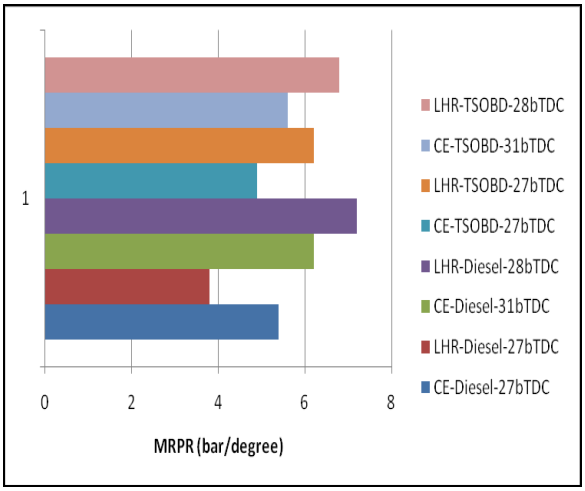

Fig.8. Bar charts showing the variation of maximum rate of pressure rise (MRPR) at peak load operation with test fuels at recommended and optimized injection timings at an injector opening pressure of 190 bar.

The value of time of occurrence of peak pressure (TOPP) decreased (towards TDC) with the advancing of the injection timing and with increase of injector opening pressure at different operating conditions of the test fuels. This once again established the fact by observing marginal increase of peak pressure and higher TOPP, that biodiesel operation with conventional engine showed compatible performance when compared with LHR engine.

Preheating of the biodiesel showed lower TOPP, compared with biodiesel at normal temperature. This once again confirmed by observing the lower TOPP, the performance of the engine improved with the preheated biodiesel compared with the normal biodiesel.

Published By:
Blue Eyes Intelligence Engineering
and Sciences Publication (BEIESP)

TABLE IV
DATA OF COMBUSTION CHARACTERISTICS AT PEAK LOAD OPERATION

Injection Timing (° bTDC)	Test Fuel	PP (bar)				MRPR (bar/deg)				TOPP (deg)			
		Injector opening pressure				Injector opening pressure				Injector opening pressure			
		190		270		190		270		190		270	
		NT	PT	NT	PT								
27(CE)	DF	50.4	--	53.5	---	5.4	--	6.0	--	10		9	
	TSOBD	52.8	48.4	54.6	50.4	4.9	3.9	5.2	4.2	11	10	10	9
27(LHR)	DF	48.4	--	51.2	--	3.8	3.2	4.5	3.8	11	10	10	9
27(LHR)	TSOBD	54.5	53.2	56.6	55.4	6.2	5.6	6.8	6.2	10	9	10	9
28(LHR)	TSOBD	68.5	67.3	70.4	69.6	6.8	5.6	7.2	6.0	8	8	8	8
28(LHR)	DF	66.4	-	68.4	--	7.2		7.6		8		8	
31(CE)	DF	62.2	--	61.9	--	6.2	--	6.8.	--	8		8	
	TSOBD	65.4	64.1	67.5	65.5	5.6	4.4	6.0	4.8	8	8	8	8

This trend of increase of maximum rate of pressure rise indicated improved and faster energy substitution and utilization by biodiesel in engine, which could replace 100% diesel fuel. That too, all these combustion characters were within the limits hence biodiesel can be effectively substituted for diesel fuel.

III. CONCLUSIONS

When compared with conventional engine, with biodiesel operation, at recommended and optimized injection timings, LHR engine at peak load operation- decreased smoke levels, increased NOx levels, increased peak pressure and increased maximum rate of pressure rise.

Increase of injection pressure with both versions of the engine with test fuels.

Smoke levels decreased, NOx levels increased and peak pressure increased.

With preheating of biodiesel with both versions of the engine, smoke levels decreased and NOx levels decreased.

All the combustion parameters were within the limits and hence biodiesel can be substituted for 100% of diesel fuel.

IV. RESEARCH FINDINGS AND SUGGESTIONS

LHR engine recorded higher NOx levels with test fuels and hence suitable catalytic converter is to be designed to reduce NOx emissions.

ACKNOWLEDGMENTS

Authors thank authorities of Chaitanya Bharathi Institute of Technology, Hyderabad for providing facilities for carrying out research work. Financial assistance provided by All India Council for Technical Education (AICTE), New Delhi, is greatly acknowledged.

REFERNCES

1. Matthias Lamping, Thomas Körfer, Thorsten Schnorbus, Stefan Pischinger, Yunji Chen : "Tomorrows Diesel Fuel Diversity – Challenges and Solutions,", SAE 2008-01—1731, 2008.
2. Agarwal,A.K, "Bio-fuels (alcohols and biodiesel) applications as fuels for internal combustion engines," International Journal Energy Combustion Science, vol.33, 2006, Pp.233-271
3. Babu, A.K. and Devarajane,G. "Vegetable oils and their derivatives as fuels for CI engines: an overview," SAE Paper No.2003-01-0767, 2003.
4. Surendra, R, K., Suhash, and D.V. "Jatropha and karanj bio-fuel: as alternate fuel for diesel engine," ARPN Journal of Engineering and Applied Sci, vol.3 (1), 2008.
5. Devan, P.K. and Mahalakshmi, N.V. "Performance, emission and combustion characteristics of poon oil and its blends in a DI diesel engine," Fuel, vol.88, 2009, pp.861-870.
6. Misra, R.D., Murthy, M.S., "Straight vegetable oils usage in a compression ignition engine—A review," Renewable and Sustainable Energy Reviews, vol.14, 2010, pp.3005– 3013.
7. Bari, S., Lim, T.H.,Yu, C.W, "Effect of preheating of crude palm oil on injection system, performance and emission of a diesel engine," Renewable Energy, vol.27 (3), 2002, pp. 339-351.
8. Nwafor, O.M.L., "The effect of elevated fuel inlet temperature on the performance of diesel engine running on a neat vegetable oil at constant speed conditions," Renewable energy, vol.28, 2003, pp.171-180.
9. Senthil Kumar, M., Kerihuel, A., Bellettre, J. and Tazerout, M. (2005). Experimental investigations on the use of preheated animal fat as fuel in a compression ignition engine. Renewable Energy, 30, 2314-2323.
10. Agarwal, D., Agarwal, A.K., "Performance and emissions characteristics of jatropha oil (preheated and blends) in a direct injection compression ignition engine," Int. J. Applied Thermal Engineering, vol. 27, 2007, pp.2314-23.
11. Canakei, M., "Performance and emission characteristics of biodiesel from soyabeen Oil," Proc. I Mech E, Part-D, Journal of Automobile Engineering, vol.219, 2005, pp. 915-922.
12. Jiwak Suryawanshi, "Performance and emission characteristics of CI engine fueled by coconut oil methyl ester," SAE Paper No. 2006-32-0077, 2006.
13. Marek Tatur, Harsha Nanjundaswamy, Dean Tomazic, Matthew Thornton, "Effects of Biodiesel Operation on Light-Duty Tier 2 Engine and Emission Control Systems," SAE 2008-01-0080, 2008.
14. Murugesan, A., Umarani, C., Subramanian,R., Nedunchezhian, N., "Bio-diesel as an alternate fuel for diesel engines," Renewable and Sustainable Energy Reviews, vol. 3(3), 2009, pp.653-662.
15. Venkatramn. And Devaradjane, G., "Experimental investigation of performance and emission characteristics of diesel-pungam oil, methyl esters diesel blends fueled DI engine at optimum engine operating parameters," International Journal of Green energy and env, vol.1, 2010, pp.7-12.
16. Heywood, J.B, "Fundamentals of Internal Combustion Engines," Tata McGraw Hills, New York, 1988.
17. Celikten, I. "An experimental investigation of the effect of the injection pressure on the engine performance and exhaust emission in indirect injection diesel engines," Applied Thermal Engineering, vol.23, 2003, pp.2051–2060.
18. Cingur, Y., & Altiparmak, D. "Effect of cetane number and injection pressure on a DI diesel engine performance and emissions," Energy Conversion and Management, vol.44, 2003, pp.389–397.

Published By:
Blue Eyes Intelligence Engineering and Sciences Publication (BEIESP)

19. Hountalas, D.T., Kouremenos, D.A., Binder, K.B., Schwarz, V., & Mavropoulos, G.C. "Effect of injection pressure on the performance and exhaust emissions of a heavy duty DI diesel engine," Warrendale, PA , SAE Technical Paper No. 2003-01-0340, 2003.
20. Venkanna, B.K., & Venkataramana, R.C. "Influence of fuel injection rate on the performance, emission and combustion characteristics of DI diesel engine running on calophyllum inophyllum linn oil (honne oil)/diesel fuel blend," SAE Technical Paper No. 2010-01-1961,, 2010..
21. Chandrakasan Solaimuthu and Palani Swamy Govindaraju, "Effect of injection timing on performance, combustion and emission characteristics of diesel engine using mahua oil methyl ester," Journal of Scientific and Industrial Research, vol.71, 2012, pp. 69-74.
22. Ratna Reddy, T., Murali Krishna, M.V.S., Kesava Reddy, Ch and Murthy, P.V.K. "Performance evaluation of mohr oil based biodiesel in low grade low heat rejection diesel engine," International Journal of Innovative Research in Science, Engineering and Technology, vol.1 (1), 2012, pp. 80-94.
23. Murali Krishna, M.V.S., Durga Prasada Rao, N., Anjeneya Prasad, B. and Murthy, P.V.K. "Improving of emissions and performance of rice brawn oil in medium grade low heat rejection diesel engine," International Journal of Renewable Energy Research, (Turkey), vol.3 (1), 2013, pp.98-108.
24. Janardhan, N., Murali Krishna, M.V.S., Ushasri, P. and Murthy, P.V.K. "Comparative performance, emissions and combustion characteristics of jatropha oil in crude form and biodiesel form in a medium grade low heat rejection diesel engine," International Journal of Soft Computing and Engineering, International Journal of Innovative Technology and Exploring Engineering, vol.2 (5), 2013, 5-15.
25. Parlak, A., Yasar, H., ldogan O. "The effect of thermal barrier coating on a turbocharged Diesel engine performance and exergy potential of the exhaust gas," Energy Conversion and Management, vol.46 (3), 2005, pp.489–499.
26. Ekrem, B., Tahsin, E., Muhammet, C. "Effects of thermal barrier coating on gas emissions and performance of a LHR engine with different injection timings and valve adjustments," Journal of Energy Conversion and Management, vol.47, 2006, pp.1298-1310.
27. Ciniviz, M., Hasimoglu, C., Sahin, F., Salman, M. S. "Impact of thermal barrier coating application on the performance and emissions of a turbocharged diesel engine," Proceedings of The Institution of Mechanical Engineers Part D-Journal Of Automobile Eng, vol.222 (D12), 2008, pp. 2447–2455
28. Murali Krishna, M.V.S., Chowdary, R.P., Reddy, T.K.K. and Murthy,P.V.K "Performance evaluation of waste fried vegetable oil in la low grade low heat rejection diesel engine," International Journal of Research in Mechanical Engineering and Technology, vol.2 (2), 2012, pp. 35-43.
29. Kesava Reddy, Ch., Murali Krishna, M.V.S., Murthy, P.V.K. and Ratna Reddy,T. "Performance evaluation of a low grade low heat rejection diesel engine with crude jatropha oil," International Scholarly Research Network (ISRN) Renewable Energy (USA), Article ID 489605, 2012, pp.1-10.
30. Ratna Reddy, T., Murali Krishna, M.V.S., Kesava Reddy, Ch. and Murthy, P.V.K. "Comparative performance of ceramic coated diesel engine with Mohr oil in crude and biodiesel form," International Journal of Engineering and Advanced Technology (CSIR), vol.2 (3), 2012, pp.588- 596.
31. Parker, D.A. and Dennison, G.M. "The development of an air gap insulated Piston", SAE Paper No. 870652, 1987.
32. Rama Mohan, K., Vara Prasad, C.M. and Murali Krishna, M.V.S. "Performance of a low heat rejection diesel engine with air gap insulated piston," ASME Journal of Engineering for Gas Turbines and Power, vol.121 (3), 1999, pp.530-540.
33. Ratna Reddy, T., Murali Krishna, M.V.S., Kesava Reddy, Ch and Murthy, P.V.K."Performance evaluation of a medium grade low heat rejectiondiesel engine with Mohr oil," International Journal of Recent Advances in Mechanical Engineering (IJMECH), vol. 1(1), May 2012, pp. 1-17.
34. Chennakesava Reddy, Murali Krishna, M.V.S., Murthy, P.V.K., and Ratna Reddy,T."Potential of low heat rejection diesel engine with crude pongamia oil," International Journal of Modern Engineering Research (IJMER), vol.1 (1), 2011, pp.210-224.
35. Janardhan, N., Murali Krishna, M.V.S., Ushasri, P. and Murthy, P.V.K. "Potential of a medium low heat rejection diesel engine with crude jatropha oil," International Journal of Automotive Engineering and Technologies, vol.1 (2), 2012, pp. 1-16.
36. Kesava Reddy, Ch., Murali Krishna, M.V.S., Murthy, P.V.K. and Ratna Reddy, T. "A comparative study of the performance evaluation of a low heat rejection engine with three different levels of insulation with crude pongamia oil operation," Canadian Journal on Mechanical Sciences & Engineering, vol.3 (3), 2012, pp. 59-71.
37. Murali Krishna, M.V.S., Chowdary, R.P., Reddy, T.K.K and Murthy, P.V.K." A comparative study of the performance of a low heat rejection diesel engine with three different levels of insulation with waste fried vegetable oil operation," International Journal of Science & Technology, vol.2 (6), June 2012,pp 358-371.
38. Ratna Reddy, T., Murali Krishna, M.V.S., Kesava Reddy, Ch. and Murthy, P.V.K. "Comparative performance of different versions of the low heat rejection diesel engine with mohr oil based bio-diesel," International Journal of Research & Reviews in Applied Sciences (IJRRAS), vol.1 (1), 2012, pp. 73-87.
39. Velikovic, V.B., Lakicevic, S.H., Stamenkovic, O.S., Todorovic, Z.B. and Lazic., M.L. "Biodiesel production from tobacco seed oil (nicatiana tabacom.L) seed oil wit high content of free fatty acids," Fuel, vol.85, 2006, pp. 2671-2675.
40. Tapasvi D, Wiesenborn D, Gustafson C "Process Model for Biodiesel Production from various Feedstock's," Trans. ASAE, vol.48(6), 2005, pp.2215- 2221.
41. Jindal S, Bhagwati PN, Narendra SR, "Comparative Evaluation of Combustion, Performance and Emissions of Jatropha Methyl Ester and Karanja Methyl Ester in a Direct Injection Diesel Engine," Energy Fuels, vol.24, 2010, pp. 1565-1572.
42. Rao, P.V. "Effect of properties of Karanja methyl ester on combustion and NOx emissions of a diesel engine," Journal of Petroleum Technology and Alternative Fuels Vol. 2(5), 2011, pp. 63-75.
43. Murali Krishna, M.V.S. "Performance evaluation of low heat rejection diesel engine with alternate fuels.," PhD Thesis, J.N.T. University, Hyderabad, 2004.
44. Gattamaneni, L.N., Saravanan, S., Santhanam, S. and Kuderu, R. "Combustion and emission characteristics of diesel engine fuelled with rice bran oil methyl ester and its diesel blends," Thermal Science, vol.12, 2008, pp139–150.
45. Aziz, A.A., Said, M.F., & Awang, M.A.Performance of palm oil-based biodiesel fuels in a single cylinder direct injection engine. Palm Oil Developments, vol.42, 2012, pp.15–27.
46. Venkanna, B.K and Venkataramana Reddy, C. "Effect of injector opening pressure on erformance, emission and combustion characteristics of DI diesel engine fueled with diesel and honne oil methyl ester," International Journal of Environmental Progress and Sustainable Energy, vol.32 (1), 2013, pp148-155.
47. Gumus, M.A. "Comprehensive experimental nvestigation of combustion and heat release characteristics of a biodiesel (hazelnut kernel oil methyl ester) fueled direct injection compression ignition engine," Fuel, vol.89, 2010, pp.2802– 2814.
48. Yamane K, Ueta A, Shimamoto Y, "Influence of Physical and Chemical Properties of Biodiesel Fuel on Injection, Combustion and Exhaust Emission Characteristics in a DI-CI Engine," Tran. Of the Jap. Soc. Mech. Eng., vol.32 (2), 2001, pp. 25-30.

AUTHOR PROFILE

Prof. N.Venketeswar rao completed his ME with CAD/CAM as specialization and working as Assistant Professor in Mechanical Engineering Department, Chaitanya Bharathi Institute of Sccience and Technology, Gandipet, Hyderabad. He put up 14 years experience in Teaching. He guided undergraduate and post gradute students and presentlyhe is ascholar doing his reach in alternative fuels

Dr. Murali Krishna is working as Professor in Mechanical Engineering Department in Chaitanya Bharathi Institute of Science and Technology, Gandipet, Hyderabad. He is having vast experience in both teaching and industry. He put up 29 years of experience. He is guiding 8 PhD scholars and published more than 100 papers in national and International Journals. He attended several national and international conferences.

Dr.P.V.Krishna Murthy did his M.Tech and PhD in Thermal Engineering and presently he is working as Director in Jaya Prakash Narayan Educational Society Group of Institutions in Mahabubnagar, Andhra Pradesh. He published more than 80 papers in national and international journals and attended several national and international conferences. Presently he is guiding 3 PhD scholars.

Published By:
Blue Eyes Intelligence Engineering
and Sciences Publication (BEIESP)